OMMB00010
Issue 3

Thermostatic valve for diverting and mixing applications

B Valve

Installation, operation and maintenance manual

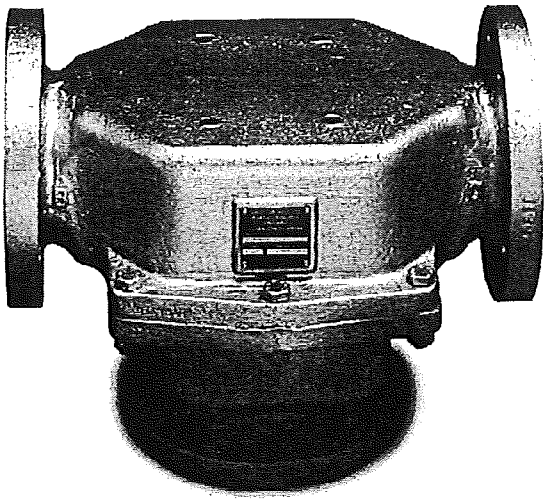

amot

DESCRIPTION

The Model B valve is designed to provide fully automatic, 3-way fluid temperature control for diverting or mixing applications. Typical applications include engine water jackets, lubricating oil cooling systems, and mixing and diverting of fluids in process control and industrial applications.

The thermostatic element in a Model B valve is fully enclosed and factory set, providing tamper-proof operation. For maintenance or to achieve a different set temperature the element can be changed, although this requires removal of the valve from its pipework. Elements are available with set temperatures from 13 to 116°C (55 to 240°F). Valves are available in nine sizes, and a variety of materials to suit different fluids.

For full details of the available options see the AMOT catalogue or contact the factory.

Manual override

As an option, B valves can be fitted with a manual override, which allows the operator to drive the unit towards the maximum cooling position. On the larger sizes with multiple elements, each has its own override. Manual override should only be used in emergencies.

1 SPECIFICATIONS

Body Material, options	Aluminium, Bronze, Cast iron, Ductile iron, Steel, Stainless steel
Internal Materials	Stainless Steel and Bronze Option: Nickel plating
Seal Material	Normally: Buna-Nitrile. Options: Viton, Neoprene or Ethylene propylene rubber
Maximum Fluid Temperature:	Depends on temperature element – see table 1.
Maximum Pressure:	Depends on body size and material – see table 3.
Maximum pressure drop across valve	0.5 bar (7psi, 50 kPa)
Minimum operating temp.	-10°C (14°F)
Minimum storage temp.	-45°C (-49°F) if followed by slow rise
Mass	See table 2
Vibration and shock	Ask factory for model-specific details

1.1 Table 1 - Temperatures in °C

Element number is nominal temperature in °F

Element	Nominal	Start to open	Fully open	Max Continuous	Max Short Periods
045	7.2	1	11	16	35
055	12.8	8	20	35	40
057	13.9	10	18	30	40
075	23.9	20	30	38	54.5
090	32.2	27	35	43.5	60
095	35.0	29.5	40.5	49	68
100	37.8	34	42	50	63
105	40.6	35	45	55	70
110	43.3	37.5	47	56	74
115	46.1	40	50	61	79
120	48.9	43	54.5	65.5	76.2
130	54.4	51	60	68.5	82
135	57.2	54	63	71	84
140	60.0	57	66	74	88
145	62.8	60	69	79	94
150	65.6	62.5	71.5	82	95
155	68.3	65.5	74	85	96
160	71.1	68	78	88	102
165	73.9	71	79.5	88	102
170	76.7	74	83	93.5	107
175	79.4	76.5	85	101.5	118
180	82.2	79.5	88	104.5	121
185	85.0	82	91	106	121
195	90.6	86.5	98	107.5	121
205	96.1	93	101.5	107.5	121
215	101.7	98.5	107	115	120
225	107.2	102	113	118	125
230	110.0	104	115	118	125
240	115.6	108	122	123	125

1.2 Table 2 - Mass in kilograms

Type	Bronze	Cast or Ductile Iron	Steel (inc. stainless)	Aluminium
1 ½"	13	11	N/A	N/A
2" BO/BH/BG	13	11	N/A	N/A
2" BF	22	18	N/A	7
2" BC/BR	26	18	20	N/A
2 ½"	29	24	34	10
3"	36	27	36	11
33	42	35	N/A	14
4"	68	61	N/A	24
5"	109	91	N/A	35
6"	136	123	N/A	48
8"	315	285	N/A	N/A

1.3 Table 3 – Maximum working pressure (bar)

Type	Bronze	Cast Iron	Ductile Iron	Steel	Stainless Steel	Aluminium
1 ½"	10	10	N/A	N/A	N/A	N/A
2" B	10	10	16	45	45	10
2" BH	N/A	22	N/A	N/A	N/A	N/A
2 ½"	10	10	16	45	45	10
3"	10	10	16	45	45	10
33	N/A	6	N/A	N/A	N/A	N/A
4"	10	10	16	20	N/A	10
5"	10	10	10	N/A	N/A	10
6"	10	10	10	N/A	N/A	10
8"	10	10	10	N/A	N/A	N/A

1.4 European Union Directives

EU Machinery Directive (89/392/EC)

The AMOT Model B Valve, as a component, is not considered to be a machine. Before the valve is put into operation, the machine into which it is installed must comply with the requirements of the machinery directive.

EU Hazardous Area Directive (94/9/EC)

Under the ATEX Directive the AMOT Model B Valve manufactured at AMOT's British Factory is approved for use in Group II Category 2 installations. Model B Valve units made at other AMOT factories are not certified for use in areas subject to the ATEX requirements. Model B Valve units manufactured in the AMOT British factory are distinguishable from those manufactured in the other factories by the other factories by the nameplate carried on them, which is shown in the following diagram.

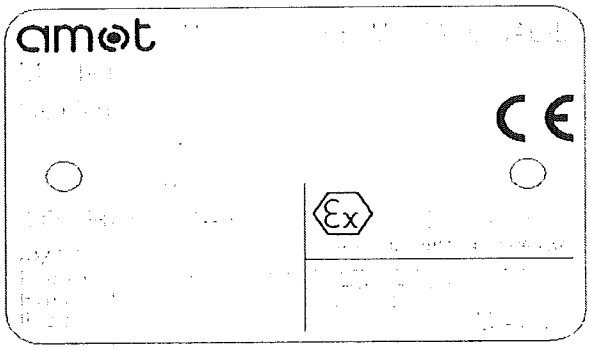

Category 2 equipment is intended for use in areas where an explosive atmosphere is likely to occur.

For safe and trouble-free use within hazardous areas the instructions within this Operating and Maintenance Manual should be strictly adhered to.

Under normal operation this valve contains no heat generating parts and assumes the temperature of the internal fluid.

The maximum continuous temperature that the valve can operate at is determined by the temperature element fitted to the temperature regulation part of the valve. This information is contained within the specification section of this manual, also contained in this section is the absolute maximum temperature that the regulated fluid can be allowed to rise to before damaging the temperature regulating elements.

Fluid temperatures in the system where the valve is operating should be continuously monitored and a protective shutdown system is to be activated when the temperatures are outside of normal operating limits.

The maximum internal pressure that this valve is permitted to work at is contained within the specification section of this manual.

The conditions for a safe installation and commissioning of this valve are contained in the installation section of this manual. The requirements for venting and protection of the valve in terms of excess temperature or pressure are brought to the attention of the installer and user.

The valve must be maintained in accordance with the maintenance section of this manual and between maintenance periods should be kept clean and the paintwork kept in good condition and touched up when necessary to prevent rusting of the external steel parts of the valve.

EU Pressure Equipment Directive (97/23/EC)
In its design application of a thermostatic valve, this product is defined as a Pressure Accessory under the terms of the EU Pressure Equipment Directive (PED). If used with fluids defined as Group 2 in the Directive (such as water and lubricating oil) the B valve falls into the Sound Engineering Practice (SEP) category. In this category units are not required to be CE marked.

Some sizes of B valve are also rated to SEP for Group 1 fluids. This is indicated on the nameplate if applicable.

Users who are uncertain as to the applicability of the Directive should contact the factory, particularly if using more hazardous (Group 1) fluids.

1.5 User changes

User maintenance must be carried out in accordance with AMOT instructions. Any other adjustment, dismantling or modification will invalidate the warranty and the product approvals.

1.6 Dimensions

For dimensions refer to data sheet 02V

2 INSTALLATION

2.1 Preparation

Before installation, ensure that the valve is suitable for the purpose, checking temperature, pressure and material parameters, and any special approval requirements. In particular note that Buna N seals are not suitable for certain fluids, including phosphate ester and diester oils. With such oils, nickel plated assemblies should also be specified to protect the bronze parts. Check that the intended pipe fittings are suitable for the application.

The valve size should have been selected in accordance with the anticipated flow rate through the valve. To maintain good temperature regulation the pressure drop across the valve should be in the 137 to 482 millibar (2 to 7 psi) range.
Refer to figure 1

At maximum flow a dynamic pressure drop of 0.2 bar with respect to the discharge pressure can occur behind the element. This effect must be considered during system design, especially in high temperature applications, in order to ensure avoidance of cavitation.

If the valve is to be fitted at a high point in the system, the system should be vented to prevent trapped air around the temperature elements. A unit with a leak hole may be necessary. Valves may be fitted in any orientation.

For optimum temperature regulation the system should be designed so that the element is in the mid-position under nominal conditions. To achieve this it may be necessary to balance the fluid flow by inserting an orifice in the by-pass circuit.

2.2 Fitting

AMOT thermostatic valves will operate in any orientation, but should be properly supported and not subjected to excessive bending. Ensure the pipes are correctly aligned before inserting the valve and tightening the connecting bolts.

3 OPERATION

The type B valve is completely automatic in operation, and needs no power supply.

3.1 Diverting applications

In diverting applications temperature is sensed at port A, which remains open to port B (bypass) until the fluid temperature reaches a point 3-6°C (5-10°F) below the nominal setting, when the valve will start to move, progressively closing port B and opening port C (the cooler connection). If the temperature continues to rise, port B will be fully closed 4 to 6°C (8-10°F) above the set temperature.

3.2 Mixing applications

In mixing applications the hot supply is connected to port B, the cold supply to port C, and the mixed flow appears, via the temperature sensor, at port A. Because of the position of the controlling wax 'pill', in mixing applications the controlled temperature may be 2-3°C above the nominal.

3.3 Manual override (if fitted)

The manual override may be operated to force all the fluid to flow through the cooler (or from the cold supply). Remove the cover cap and loosen the locknut. Turn the shaft counter-clockwise to its limit. Manual override should only be used in emergencies.

To return the valve to automatic operation, turn the shaft to its clockwise limit, re-tighten the locknut, and replace the cap.

Models with multiple temperature elements have an override on each.

4 MAINTENANCE

Properly applied and installed AMOT thermostatic valves require minimal maintenance. Inspection at 2 or 3 year intervals is adequate to detect normal wear. In the 8B valve the element assembly may be removed for inspection without removing the valve from the connecting piping. All other sizes must be removed from the piping. Some sizes have two or more independent temperature elements.

To remove an element assembly, ensure that the fluid system is drained and depressurised. Remove the valve from the system. Separate the body parts and lift out the element assembly. Inspect both the element assembly and the seat for wear and damage. Check that the element is fully closed.

It is always advisable to replace all gaskets and 'O' rings with new parts before re-assembly, lubricating them lightly with a good grade of petroleum grease before re-installing the element, the cage and cover. In some sizes gaskets are used in place of 'O' rings as the housing seals – see parts list. On reassembly the housing bolts should be tightened to the torques defined in table 5.

Ensure no air is trapped around the valve when the system is recommissioned.

5 HANDLING

Suitable care must be taken to avoid injury when handling valves. The mass of the units varies between 11 kg (25 lb) and 315kg (695 lb), depending on size and material. See table 2 for details of all variations.

6 STORAGE

Protect stored valves against ingress of dirt and airborne contaminates, and avoid frost or direct sunlight. Do not raise the temperature above the sensing element rating. Storage is permitted down to -45°C (-49°F) but this must be followed by a slow increase.

Valves should be kept dry and not subjected to any shock loads or abrasion. Valves may be stored in any position and will not deteriorate with time, apart from the 'O' rings, which should be replaced after 7 years.

7 SPARES LIST

7.1 Table 3 – Number of elements in different units

Size Code	Valve nominal bore		Number of elements
	Inches	mm	
1 ½	1.5	40	1
2	2	50	1
2 ½	2.5	65	2
3	3	80	2
33	3	80	3
4	4	100	4
5	5	125	6
6	6	150	9
8	8	200	16

7.2 Table 4 – User maintenance parts

Part Number	Description	Quantity
1096X(temp°F)	Element assembly	See table 1
6836S(temp°F)	Element assembly, 'Saltwater' plated	See table 1
2433X(temp°F)	Element assembly with manual override	See table 1
6838S(temp°F)	Element assembly, 'Saltwater' plated, with manual override	See table 1

Seal Kits						
Size	Material					
	BO			BR		
	Nitrile	Viton	Neoprene	Nitrile	Viton	Neoprene
1.1/2"	46342X151	46342X152	46342X153	46342X154	46342X155	46342X156
2"	46342X201	46342X202	46342X203	46342X204	46342X205	46342X206
2.1/2"	46342X251	46342X252	46342X253	46342X254	46342X255	46342X256
3" 3BO,3BR	46342X301	46342X302	46342X303	46342X304	46342X305	46342X306
3" 33BO, 33BR	46342X331	46342X332	46342X333	46342X334	46342X335	46342X336
4" 4BOA,4BOB 4BOC,4BOD	46342X401	46342X402	46342X403	46342X404	46342X405	46342X406
4" 4BOR,4BOS 4BRR,4BRS	46342X411	46342X412	46342X413	46342X414	46342X415	46342X416
5"	46342X501	46342X502	46342X503	46342X504	46342X505	46342X506
6"	46342X601	46342X602	46342X603	46342X604	46342X605	46342X606
8"	46342X801	46342X802	46342X803	46342X804	46342X805	46342X806

7.3 Table 5 – Tightening torques for bolts

Size Code	O ring Nm	O ring lb ft	Gasket Nm	Gasket lb ft
1 ½	54	40	N/A	N/A
2	54	40	N/A	N/A
2 ½	80	60	N/A	N/A
3	80	60	N/A	N/A
33	80	60	N/A	N/A
4	N/A	N/A	68	50
5	N/A	N/A	122	90
6	N/A	N/A	122	90
8	N/A	N/A	122	90

AMOT CONTROLS

Quality and reliability for over 50 years

Internally Sensed Valves (Model B)

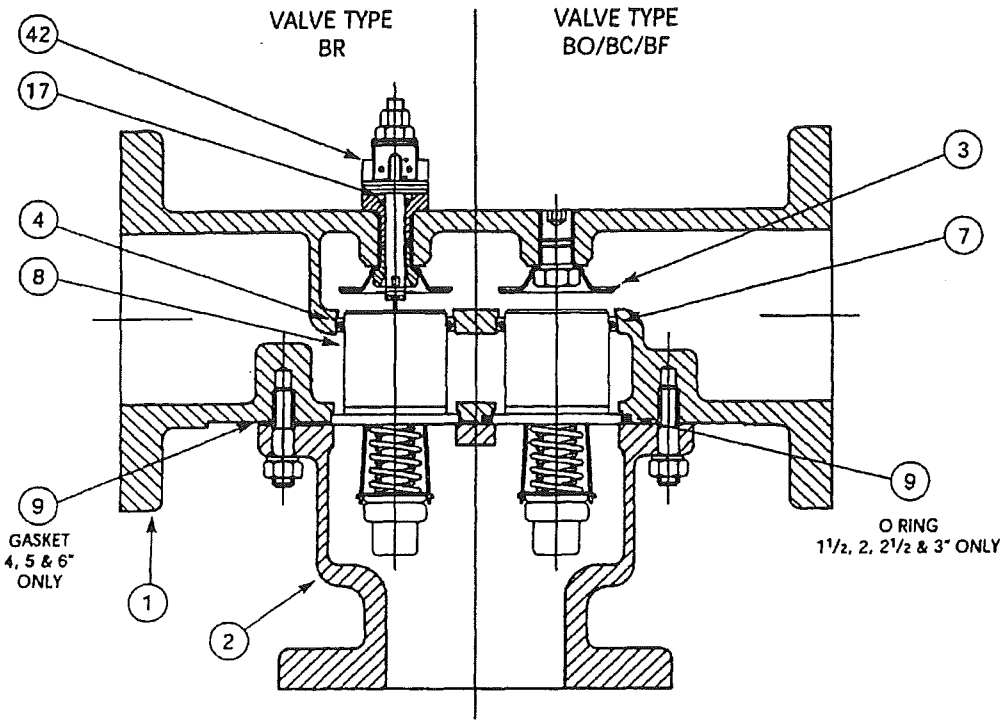

Ref No.	Part No.	Description
1		Upper Housing
2		Lower Housing
3	9585L001	Seat (except BR)
3	9585L002	Seat (BR only)
4	1182	Sleeve
7	1183	Element O-ring, Buna N (Standard)
7	1183L002	Element O-ring Seal, Viton
8	1096X(temp)	Element Assembly (Standard)
8	1096P(temp)	Element Assembly, plated
8	2433X(temp)	Element Assembly, manual override (BR only)
9	761	O-ring 1-1/2 + 3B, Buna N
9	761L001	O-ring 1-1/2 + 3B, Viton
9	1094	Gasket 2-1/2B, 3B, (Old Version)
9	1123	Gasket 4B
9	1117	Gasket 5B
9	1149	Gasket 6B
17	358	O-ring, Buna N (BR only)
17	358L001	O-ring, Viton (BR only)
42		Regualting screw with indicator

AMOT Controls Limited
Western Way, Bury St Edmunds
Suffolk IP33 3SZ
England
Telephone: (01284) 762222
Telex: 81283
Telefax: (01284) 760256

AMOT Controls Corporation
401 First Street
Richmond, California
94801-2906, USA
Telephone: (510) 236-8300
Telefax: (510) 234-9950

AMOT Controls
10 Eunos Road 8
#12-06 Singapore Post Centre
Singapore 408600
Telephone: (65) 6293 4320
Telefax: (65) 6293 3307

AMOT Controls (UK) Ltd

© Copyright Amot Controls Limited Amot UK factory approved to ISO 9001 Web: http://www.amot.com

WIKA

TM 55.02

Bimetal Thermometers

Process Industry Series • Model 55 with Adjustable Stem and Dial

Thermometers

Service intended
All stainless steel thermometer. Suitable for corrosive media and environments in chemical process, petroleum and food industry. The instruments meet the highest standards of measurement technique.

Nominal size
100 and 160 mm

Temperature element
Coiled bimetal

Accuracy
Class 1 per DIN EN 13 190

Working range
Permanent (1 year): measuring range per DIN EN 13 190
Short time (24 h max.): scale range per DIN EN 13 190

Pressure rating of stem
25 bar maximum

Nominal use
DIN EN 13 190

Ingress protection
IP 56 / IP 65 per EN 60 529 / IEC 529
IP 65 per EN 60 529 / IEC 529 for gauges with alarm contacts

Standard features

Location of stem
Centre back

Case
Rotatable on stem 360°
Stem adjustable every angle
Material: stainless steel

Bezel
Cam ring (bayonet type) bezel, natural finish stainless steel

Connection
Plain stem, stainless steel 1.4571

Stem
8 mm diameter, stainless steel 1.4571

Dial
White aluminium with black lettering per DIN EN 13 190

Pointer
Adjustable black aluminium pointer

Window
Instrument glass

Optional extras

- Case and stem with liquid damping (250 °C max.)
- Ingress protection IP 66 (not for gauges with alarm contacts)
- Scale °F, K; dual scale °C/°F
- Window of laminated safety glass or non-splintering plastic
- Stem 6, 10 or 12 mm diameter
- Stem with integral thread connection
- Thermowells per DIN 43 772 or to user specifications
- Alarm contacts (see data sheet AC 08.01)

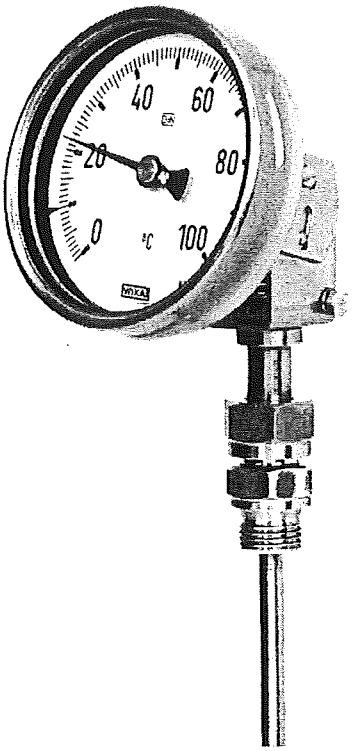

Scale, measuring ranges [1], limits of error per DIN EN 13 190, class 1

Scale range °C	Scale spacing °C	Measuring range [1] °C	Limit of error °C
- 70 ... + 30	1	- 60 ... + 20	1
- 50 ... + 50		- 40 ... + 40	
- 30 ... + 50		- 20 ... + 40	
- 20 ... + 60		- 10 ... + 50	
0 ... 60		+ 10 ... + 50	
0 ... 80		+ 10 ... + 70	
0 ... 100		+ 10 ... + 90	
0 ... 120	2	+ 10 ... + 110	2
0 ... 160		+ 20 ... + 140	
0 ... 200		+ 20 ... + 180	
0 ... 250	5	+ 30 ... + 220	2.5
0 ... 300		+ 30 ... + 270	5
0 ... 400		+ 50 ... + 350	
0 ... 500		+ 50 ... + 450	
0 ... 600	10	+ 100 ... + 500	10

Models

Model	Nominal size	Location of stem / Case
S 5550	100	Centre back / adjustable every angle
S 5551	160	

1) The measuring range is indicated on the dial by two triangular marks. Within this range the stated limit of error is valid according to DIN EN 13 190.

Dimensions

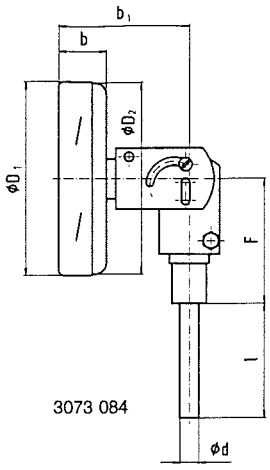

Nominal size	Dimensions [mm]												Weight [kg]
	alarm contacts of model												
	without		811 or 831 1 or 2		3		831.11 831.22						
	b	b_1	b	b_1	b	b_1	b	b_1	d	D_1	D_2	F	
100	25	68	88	131	–	–	88	131	8 1)	101	99	68	0.500
160			100	143	115	158	115	158		161	159		0.700

1) Option: stem diameter 6, 10, 12 mm

Design of connection

Dimensions [mm]

Connection 1
Plain stem
Length of stem l = 140, 200, 240 or 290 mm
Stainless steel 1.4571
To fit compression fitting of connection 4

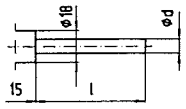

Connection 2
Male nut G ½ B
Length of stem l_1 = 80, 140, 180 or 230 mm
Stainless steel 1.4571

Male thread G	SW	i
G ½ B	27	20

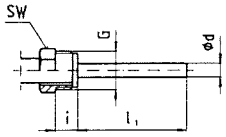

Connection 3
- Union nut G ½ , G ¾ or M 24 x 1.5
  Length of stem l_1 = 89, 126, 186, 226 or 276 mm
  Stainless steel 1.4571

Female thread G_1	SW	i
G ½	27	8.5
G ¾	32	10.5
M 24 x 1.5	32	13.5

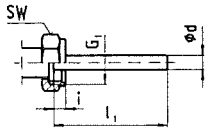

Connection 4
Compression fitting (sliding on stem)
G ½ B, G ¾ B, M 18 x 1.5, ½ NPT or ¾ NPT
Minimum insertion l_{min} approx. 60 mm
Length of stem l_1 = variable
Length L = l_1 + 40 mm
Stainless steel 1.4571

Male thread G	SW	d_4	i
G ½ B	27	26	14
G ¾ B	32	32	16
M 18 x 1.5	24	23	12
½ NPT	22	–	19
¾ NPT	30	–	20

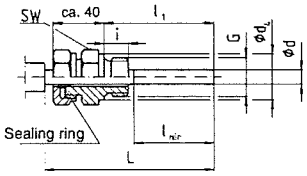

3073 050.04

Ordering information

Model / Nominal size / Scale range / No. and size of connection / Length of stem l, l_1 / Optional extras required

Specifications and dimensions given in this leaflet represent the state of engineering at the time of printing.
Modifications may take place and materials specified may be replaced by others without prior notice.

WIKA Alexander Wiegand GmbH & Co. KG
Alexander-Wiegand-Straße · 63911 Klingenberg
Tel.: (0 93 72) 132-0 · Fax: (0 93 72) 132-406
http://www.wika.de · E-mail: info@wika.de

9019243 03/2004 GB

Bourdon Tube Pressure Gauges
Stainless Steel, Safety Pattern Version
Model 232.30/233.30, without/with Liquid Filling

WIKA Data Sheet PM 02.04

Applications

- Increased safety requirements
- With liquid filled case for applications with high dynamic pressure pulsations or vibrations
- Suitable for corrosive environments and gaseous or liquid media that will not obstruct the pressure system
- Process industry: chemical/petro-chemical, power stations, mining, on- and offshore, environmental technology, mechanical engineering and plant construction

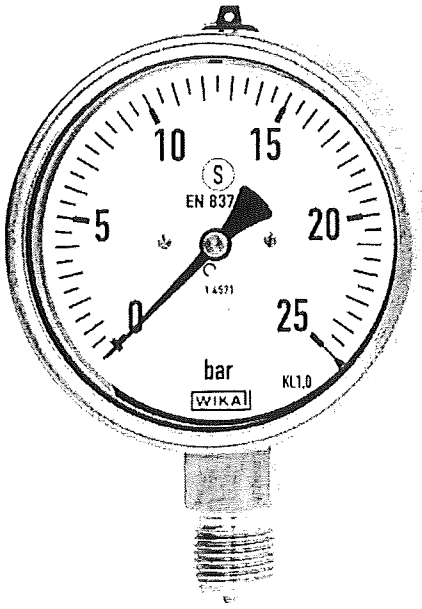

Bourdon Tube Pressure Gauge Model 232.30

Special Features

- Safety pressure gauge with solid baffle wall designed in compliance with operational safety requirements of EN 837-1, BS 1780 and ASME B 40.1
- Excellent load-cycle stability and shock resistance
- All stainless steel construction
- Scale ranges up to 0 ... 1600 bar

Description

Design
EN 837-1

Nominal size
63, 100 and 160 mm

Accuracy class
63 mm: 1.6
100, 160 mm: 1.0

Scale ranges
63 mm: 0 ... 1 to 0 ... 1000 bar
100 mm: 0 ... 0.6 to 0 ... 1000 bar
160 mm: 0 ... 0.6 to 0 ... 1600 bar
or other equivalent units of pressure or vacuum

Working pressure

63 mm:	Steady:	full scale value
	Fluctuating:	0.9 x full scale value
	Short time:	1.1 x full scale value
100, 160 mm:	Steady:	full scale value
	Fluctuating:	0.9 x full scale value
	Short time:	1.3 x full scale value

Operating Temperature
Ambient: -40 ... +60 °C without liquid filling
-20 ... +60 °C gauges with glycerine filling
Medium: +200 °C maximum without liquid filling
+100 °C maximum with liquid filling

Temperature effect
When temperature of the pressure element deviates from reference temperature (+20 °C):
max. ±0.4 %/10 K of true scale value

Ingress protection
IP 65 per EN 60 529 / IEC 529

Stainless steel series *model 232.50* *see data sheet PM 02.02*
High pressure series *model 222.30* *see data sheet PM 02.09*
For UHP applications, safety pressure gauges *model 232.35* *see data sheet PM 02.11*

WIKA
Part of your business

Standard features

Pressure connection
Material: stainless steel 316L
Lower mount (LM) or lower back mount (LBM) [1]
63 mm: G ¼ B (male), 14 mm flats
100, 160 mm: G ½ B (male), 22 mm flats (160 mm only lower mount)

Pressure element
Material: stainless steel 316L
< 100 bar: C-type
≥ 100 bar: helical type

Movement
Stainless steel

Dial
White aluminium with black lettering,
63 mm with pointer stop pin

Pointer
Black aluminium

Case
Natural finish stainless steel, case with solid baffle wall and blow-out back

Window
Laminated safety glass

Bezel ring
Cam ring (bayonet type), natural finish stainless steel

Liquid filling (for model 233.30)
Glycerine 99.7 %

1) Connector position back mount only for gauges NS 63 and 100 without liquid filling

Optional extras

- Other pressure connections
- Monel pressure system (model 262.30)
- Pressure system stainless steel 1.4571
- 3-hole panel mounting flange, stainless steel or stainless steel, polished
- Surface mounting lugs on case, stainless steel
- Ambient temperature -40 °C: silicon oil filling
- Alarm contacts (see data sheet AC 08.01)
- Transmitter (model 89X.34, see data sheet AE 08.02)

Standard version

Radial bottom pressure entry (LM)

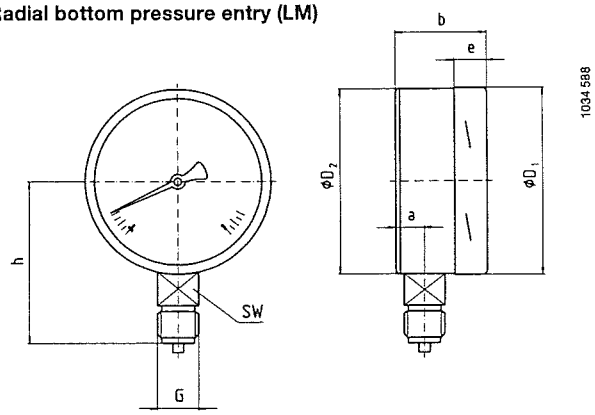

Lower back pressure entry (LBM) [1]

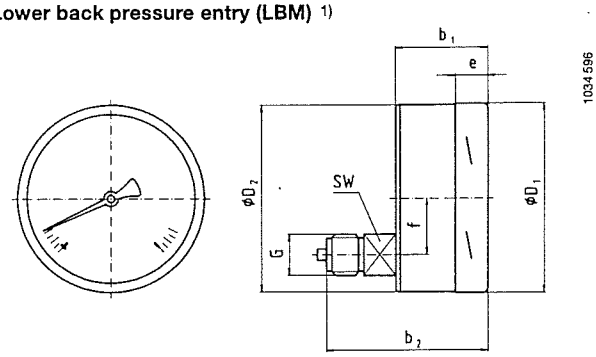

Dimensions in mm

NS	Dimensions in mm a	b	b_1	b_2	D_1	D_2	e	f	G	h ± 1	SW	Weight in kg Mod. 232.30	Mod. 233.30
63	17.5	42	42	61	63	63	14.5	18.5	G ¼ B	54	14	0.20	0.26
100	25	59.5	59.5	93	101	100	17	30	G ½ B	87	22	0.65	1.08
160	27 [1]	65 [2]	-	-	161	159	17.5	-	G ½ B	118	22	1.30	2.34

Standard pressure entry with parallel thread and sealing to EN 837-1 / 7.3
1) 41.5 mm with pressure ranges ≥ 100 bar
2) 79 mm with pressure ranges ≥ 100 bar

Ordering information
Pressure gauge model / Nominal size / Scale range / Size and location of connection / Optional extras required

Modifications may take place and materials specified may be replaced by others without prior notice.
Specifications and dimensions given in this leaflet represent the state of engineering at the time of printing.

9019766 01/2004 GB

WIKA Alexander Wiegand GmbH & Co. KG ·
Alexander-Wiegand-Straße 30
63911 Klingenberg/Germany
Phone (+49) 93 72/132-0
Fax (+49) 93 72/132-406
E-Mail info@wika.de
www.wika.de

Operating instruction
IM/262_4H_8

Field^{IT}

2600T Series Pressure Transmitters

Models 262H/N/G/A
Models 264H/N/G/A

Industrial^{IT} enabled

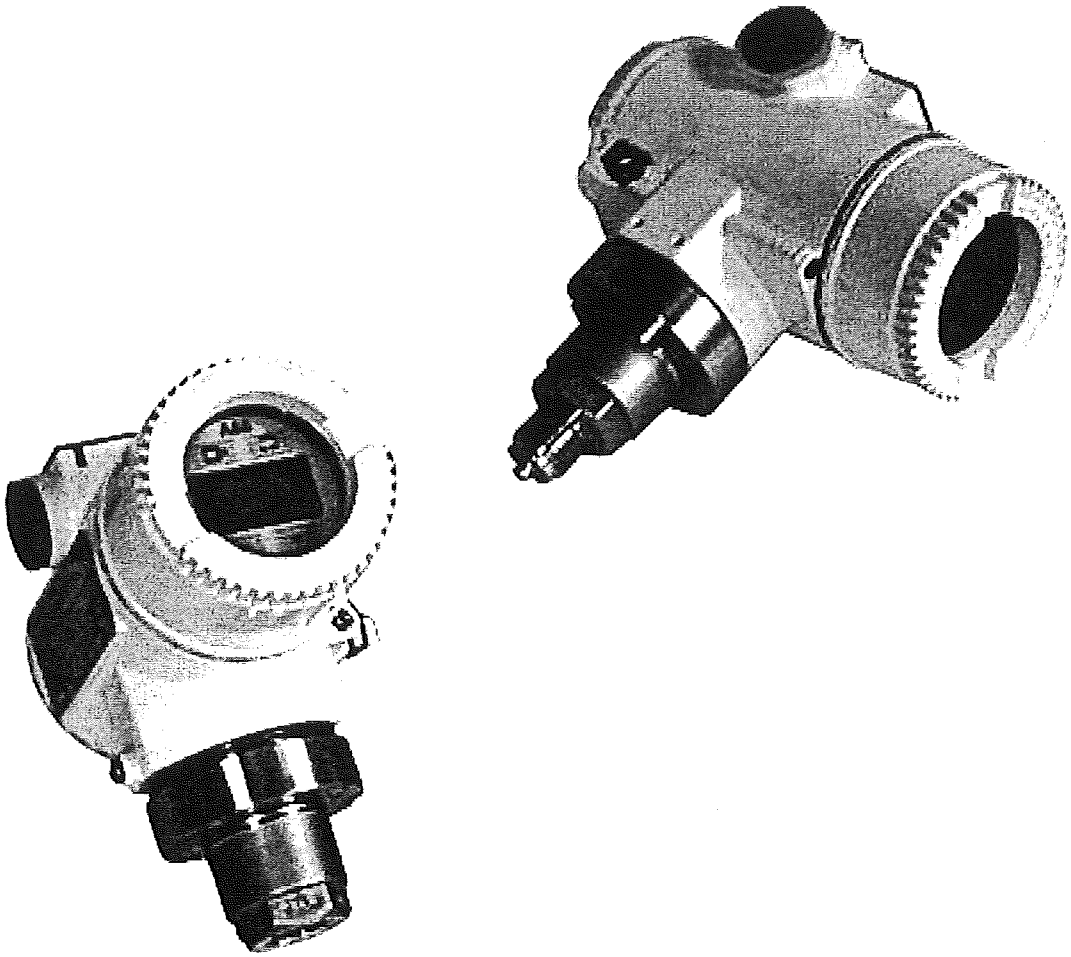

ABB

The Company

We are an established world force in the design and manufacture of instrumentation for industrial process control, flow measurement, gas and liquid analysis and environmental applications.

As a part of ABB, a world leader in process automation technology, we offer customers application expertise, service and support worldwide.

We are committed to teamwork, high quality manufacturing, advanced technology and unrivalled service and support.

The quality, accuracy and performance of the Company's products result from over 100 years experience, combined with a continuous program of innovative design and development to incorporate the latest technology.

The NAMAS Calibration Laboratory No. 0255(B) is just one of the ten flow calibration plants operated by the Company, and is indicative of our dedication to quality and accuracy.

EN ISO 9001: 1994

Cert. No. Q5907

ISO 9001: 2000

Cert. No. 9/90A

UKAS CALIBRATION 0255

Cert. No. 0255

Use of Instructions

Warning.
An instruction that draws attention to the risk of injury or death.

Note.
Clarification of an instruction or additional information.

Caution.
An instruction that draws attention to the risk of damage to the product, process or surroundings.

Information.
Further reference for more detailed information or technical details.

Although **Warning** hazards are related to personal injury, and **Caution** hazards are associated with equipment or property damage, it must be understood that operation of damaged equipment could, under certain operational conditions, result in degraded process system performance leading to personal injury or death. Therefore, comply fully with all **Warning** and **Caution** notices.

Information in this manual is intended only to assist our customers in the efficient operation of our equipment. Use of this manual for any other purpose is specifically prohibited and its contents are not to be reproduced in full or part without prior approval of Technical Communications Department, ABB.

Health and Safety

To ensure that our products are safe and without risk to health, the following points must be noted:

1. The relevant sections of these instructions must be read carefully before proceeding.
2. Warning labels on containers and packages must be observed.
3. Installation, operation, maintenance and servicing must only be carried out by suitably trained personnel and in accordance with the information given. Any deviation from these instructions, will transfer the complete liability to the user.
4. Normal safety precautions must be taken to avoid the possibility of an accident occurring when operating in conditions of high pressure and/or temperature.
5. Chemicals must be stored away from heat, protected from temperature extremes and powders kept dry. Normal safe handling procedures must be used.
6. When disposing of chemicals ensure that no two chemicals are mixed.

Safety advice concerning the use of the equipment described in this manual or any relevant hazard data sheets (where applicable) may be obtained from the Company address on the back cover, together with servicing and spares information.

Section	Page

INTRODUCTION 3
TRANSPORT, STORAGE, HANDLING AND PRODUCT IDENTIFICATION 4
PRINCIPLE OF OPERATION 5
INSTALLATION 7
ELECTRICAL CONNECTIONS 10
ELECTRICAL REQUIREMENTS 12
RANGE AND SPAN CONSIDERATION 12
CALIBRATION 13
DISMANTLING AND REASSEMBLY 14
SIMPLE FAULT FINDING 17
RETURNING FORM 18

INTRODUCTION

The **2600T** series is a modular range of field mounted, microprocessor based electronic transmitters, using a unique inductive sensing element. The models here described are a pressure transmitter with "single port" process connection; this provides accurate and reliable measurement of gauge and absolute pressure, in the even most difficult and hazardous industrial environments.

The 2600T Smart series transmitter now includes Analog Version plus HART digital communication, a Profibus DP-PA Version and a Fieldbus FOUNDATION Version.

Digital communication protocols allow remote re-ranging, calibration and diagnostics.

With respect to HART, the bidirectional digital communication does not have any interference with the standard 4-20 mA analog output signal.

Profibus has a complete digital only communication, as well as Fieldbus FOUNDATION.

This manual describes the features, the installation and calibration procedures related to the 2600T Series Transmitter with HART Communication Protocol.

The 2600T series also gives the opportunity to utilize ceramic and silicon sensing elements, depending on measuring range and measured variable.

SUPPLEMENTARY DOCUMENTATION

Reference information on remote seals and configuration of the transmitter can be found in the following documents:

SS/S264x	Remote Seal Specification
SS/264xx	Data Sheets
SL/2600T	Spare Part List
IM / 691HT	Hand-Held Communicator

Online HELP SMART VISION Configuration Program

TRANSPORT

After final calibration, the instrument is packed in a carton (Type 2 to ANSI/ASME N45.2.2-1978), intended to provide protection from physical damage.

STORAGE

The instrument does not require any special treatment if stored as despatched and within the specified ambient conditions level (Type 2 to ANSI/ASME N45.2.2-1978).
There is no limit to the storage period, although the terms of guarantee remain as agreed with the Company and as given in the order acknowledgement.

HANDLING

The instrument does not require any special precautions during handling although normal good practice should be observed.

PRODUCT IDENTIFICATION

The instrument is identified by the data plates shown in Figure 1.
The Nameplate (ref.A) provides information concerning the code number, maximum process working pressure, range and span limits, power supply and output signal. See code/ specification sheet for detailed information. This plate also shows the transmitter serial number.
Please refer to this number when making enquiries.
A dedicated label (ref. B) is welded as standard to the primary unit, carrying specific details of the transducer (diaphragms material, fill fluid, range limit and identification number).
A Safety Marking plate (ref. C) is fitted when the transmitter is required to comply with hazardous area regulations, e.g. flameproof, intrinsic safety or both protection type combined.
Additionally a wired-on type tag plate (ref. D) provides the customer tag number and calibrated range, maximum process working pressure (PS) and temperature (TS).
The instrument may be used as a safety accessory (category IV) as defined by the Pressure Equipment Directive 97/23/EC. In this case, near the CE mark, there is the number of the notified body (1130) that verified the compliance.

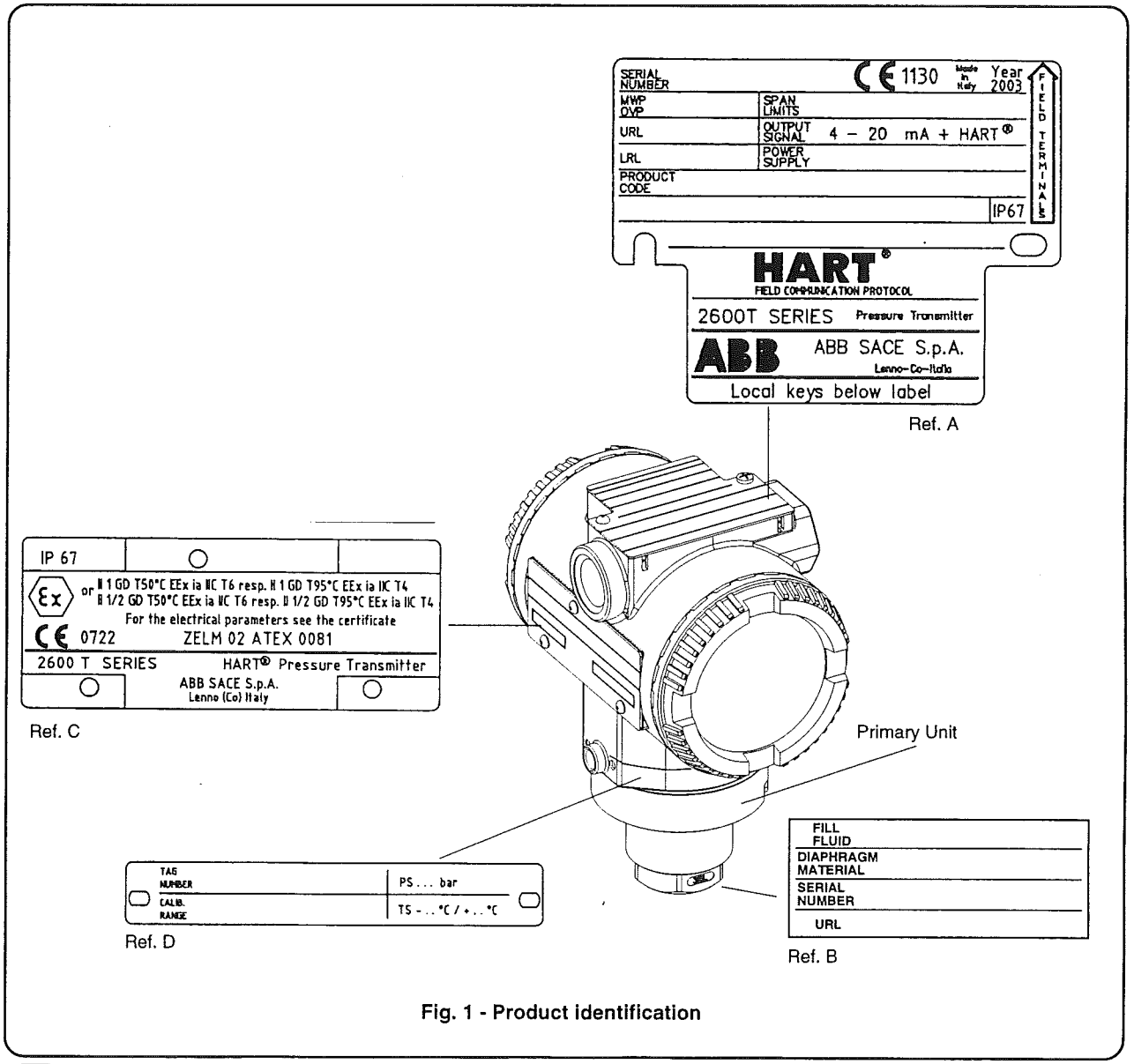

Fig. 1 - Product identification

Important - The instrument serial number must always be quoted when making enquiries.

PRINCIPLE OF OPERATION

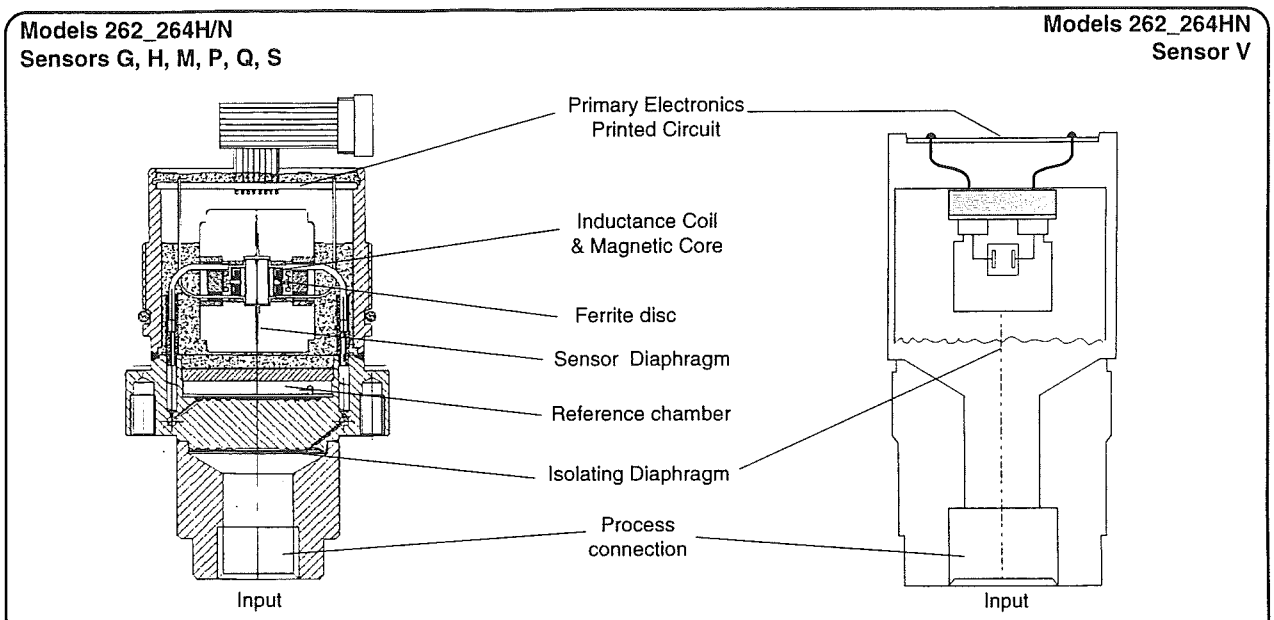

Fig. 2a - Primary Unit

The instrument consists of two functional units:
- Primary Unit
- Secondary Unit

The Primary Unit includes the process interface and the sensor, the Secondary Unit includes the electronics, the terminal block and the housing. The two units are mechanically coupled by a threaded joint. Electronics of Secondary Units is based on custom integrated components (Application Specific Integrated Circuit - ASIC).

The principle of operation of the Primary Unit, excluding model 420 bar (see later), is as follows. The process fluid (liquid, gas or vapour) exerts pressure on to the measuring diaphragm via flexible, corrosion-resistant isolating diaphragm and the fill fluid (see Fig. 2a). The other side of the measuring diaphragm is either at "atmosphere", for gauge measurement, or at "vacuum", for absolute measurement. As the measuring diaphragm deflects in response to input pressure changes, it simultaneously produces variations in the gap between the magnetic disc and the magnetic core of the coil, which is mounted rigidly on to the primary body. As a result, the inductance of the coil changes.

The inductance values of the coil is compared to that of a reference inductor carried by the primary electronics. The unit also includes a temperature sensor. The two inductance values and the sensor temperature, are combined in the primary electronics to provide a proprietary standard signal.

For the 420 bar model the principle is quite different because the sensor is a capacitive silicon sensor. Referring to fig. 2a (Range T - 420 bar model) the pressure applied to the separating diaphragm is transferred to the filling fluid (typical silicon oil) acting directly on the silicon chip. The variation of capacitance is compared with a reference capacitance and it is converted in an electrical signal of the same type as for the inductance sensor. Consequently the further elaboration, together with temperature signal is equivalent allowing to use the same secondary electronics.

In the manufacturing process the sensor output characteristics are compared with reference pressures and temperatures: the "mapped" parameters are then stored in EEPROM # 1.

Depending on measuring range and measured variable in other words, on the model, also a ceramic pressure sensor (Fig. 2b) and a silicon pressure sensor (Fig. 2c) can be adopted.

In case of the ceramic pressure sensor, the applied process pressure (pe / pabs) is transferred directly to the measuring diaphragm, whereas, in case of the silicon pressure sensor, the pressure is transferred via the separating diaphragm and the fill fluid to the measuring diaphragm. When using the ceramic pressure sensor, a minimal deflection of the measuring diaphragm changes the output voltage of the pick-up system. In the silicon pressure sensor, the resistance values of four piezo-resistors doped in the measuring diaphragm will change which causes a change of the output voltage. This pressure-proportional output voltage is converted by means of the electronic matching unit and the amplifier into an electrical signal.

The measured values and the sensor parameters are transferred to the Secondary Unit, where a microprocessor computes precise primary output linearisation, compensating for the combined effects of sensor non linearity and temperature changes. In the secondary electronics EEPROM #2 stores specific transmitter information:
- non modifiable data such as the serial number, the UID (Unique Identifier), the manufacturer's name and device type, the hardware and software version of the electronics.
- the modifiable data such as the final trimming and calibration ie., all data that can be changed by the user through the configurator devices.

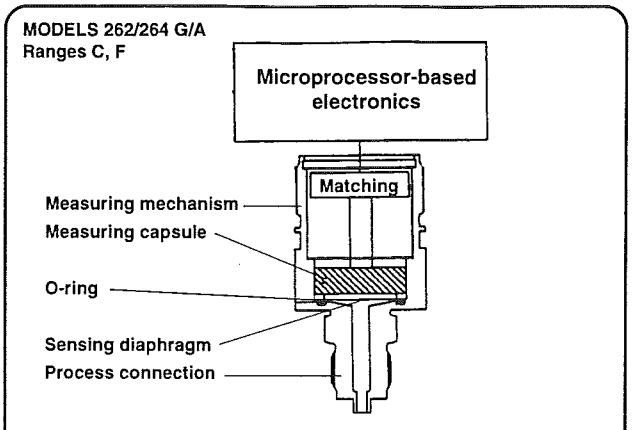

Fig. 2b - Capacitive - Ceramic pressure sensor for absolute pressure

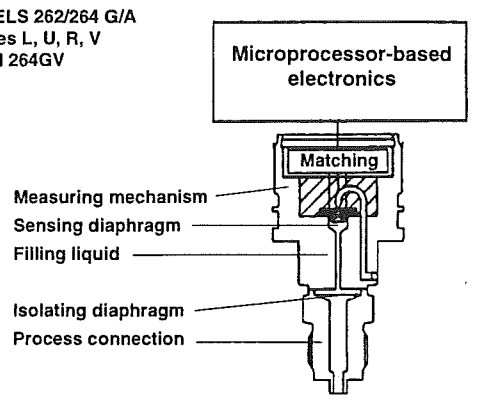

Fig. 2c - Piezoresistive - Silicon pressure sensor for gauge pressure and level

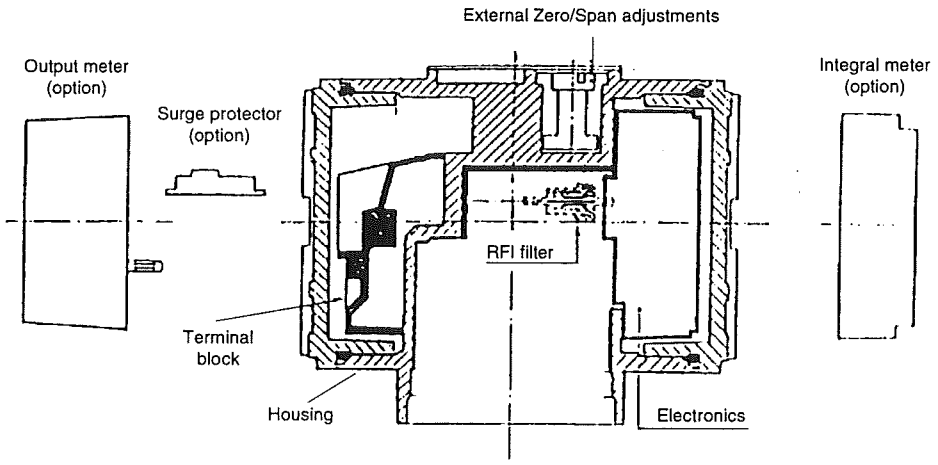

Fig. 2d - Secondary Unit

The microprocessor receives data from the internal modem, in order to provide bidirectional digital communication with the configuration device, i.e. the Hand Held terminal "Communicator" or P.C. based "Configurator".

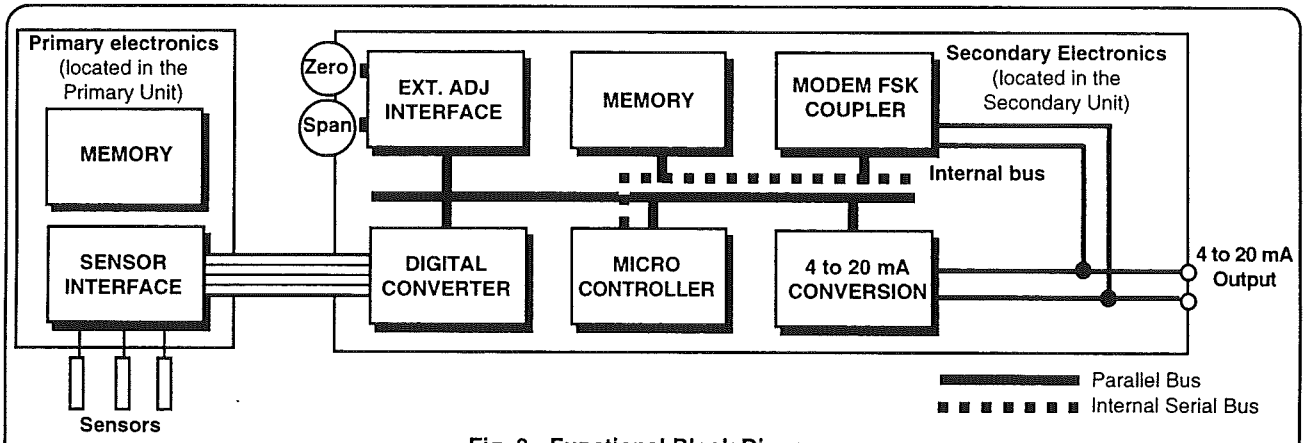

Fig. 3 - Functional Block Diagram

With secondary electronics analog+HART, it is to be consider that different communication protocols exist for configuration and maintenance operations. Here follows a brief description on the matter; please refer to appropriate technical specification for additional deeper explanations on the communication aspects.

The HART protocol is based on the standard Bell 202 FSK (Frequency Shift Keying) with a ±0.5 mA signal modulation superimposed on the 4 to 20 mA analog signal. As the energy balance added to the current loop is virtually zero and the frequency is very high compared to that of the process dynamic, the analog process signal remains undisturbed.

Using a configuration device it is then possible to remotely modify the configuration of the transmitter, e.g. the measuring range.

It is also possible to read other transmitter data and diagnostic information. Limited rezeroing and respanning, comparable to that conventional analog transmitters is possible using the optional calibration device. Refer to Fig. 3 for a complete view of the Functional Block Diagram.

The sensor and all electronic parts are galvanically isolated from the transmitter body.

INSTALLATION

WARNING - In order to ensure operator safety and plant safety it is essential that installation is carried out by suitably trained personnel according to the technical data provided in the specification for the relevant model.

The transmitter may be mounted on a 2-inch pipe (see following figures) by means of the proper mounting bracket. The transmitter may also be directly, supported by the piping connection.

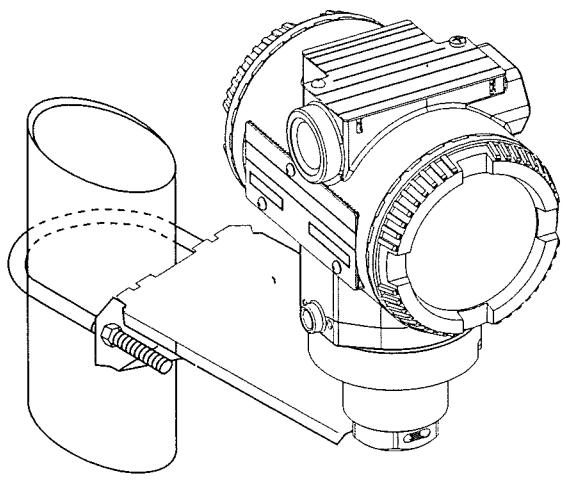

Fig. 4 - Mounting on pipe

WARNING - For installation in Hazardous Areas, i.e. areas with dangerous concentrations of e.g. gases or dusts that may explode if ignited, the installation must be carried out in accordance with relative standards either EN 60079-14 or IEC 79-14 and/or with local authority regulations, for the relevant type of protection adopted. Together with safety information here and after enclosed see also the Addendum for "Ex Safety" aspects which is part of this instruction manual.

WARNING: The transmitter when installed in accordance with this instruction manual will not be subjected to mechanical stresses.

WARNING: the transmitter should not be installed where it may be subjected to mechanical and thermal stresses or where it may be attached by existing or foreseeable aggressive substances.
ABB cannot guarantee that a construction material is suited to a particular process fluid under all possible process conditions. See also the paragraph on "Operative limits".

CAUTION - Proper location of the transmitter with respect to the process pipe will depend upon the service for which the instrument is used. Care should be exercised to identify correct process connections.

The secondary unit of the transmitter may be rotated through 360° approx. with respect to the primary unit without degrading performance or damaging the internal wiring. Do not force the primary unit to rotate; use the 2 mm Allen key supplied to unlock and lock the tang grub screw (see Fig. 7). This feature, obtained by unscrewing (one turn is sufficient) the Allen screw, is particularly useful for reaching optimum access to the electrical connections and visibility of the output indicator.

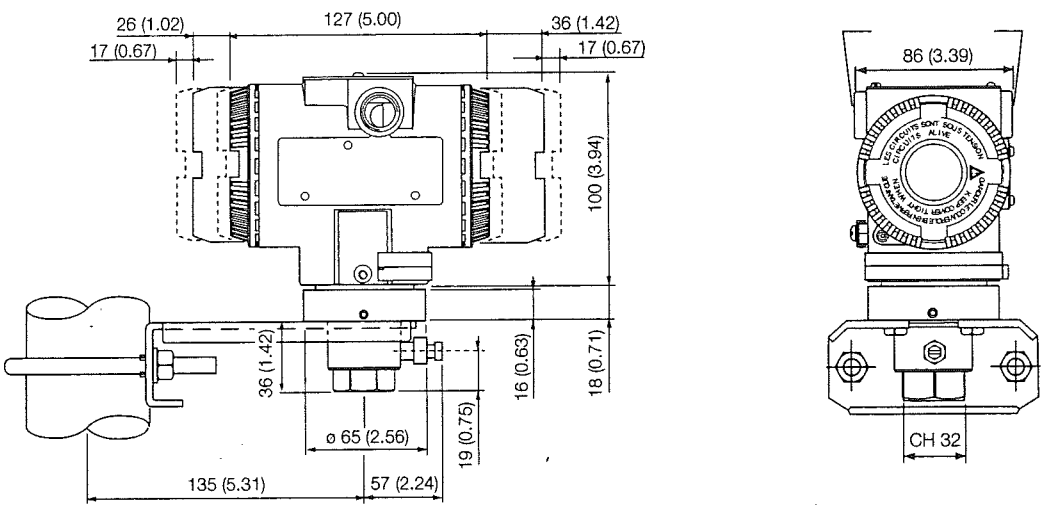

½in – 14 NPT female connection for sensors G, H, M, P, Q, S

Note: dimensions are expressed in mm. (Between parenthesis the same dimensions expressed in inches).

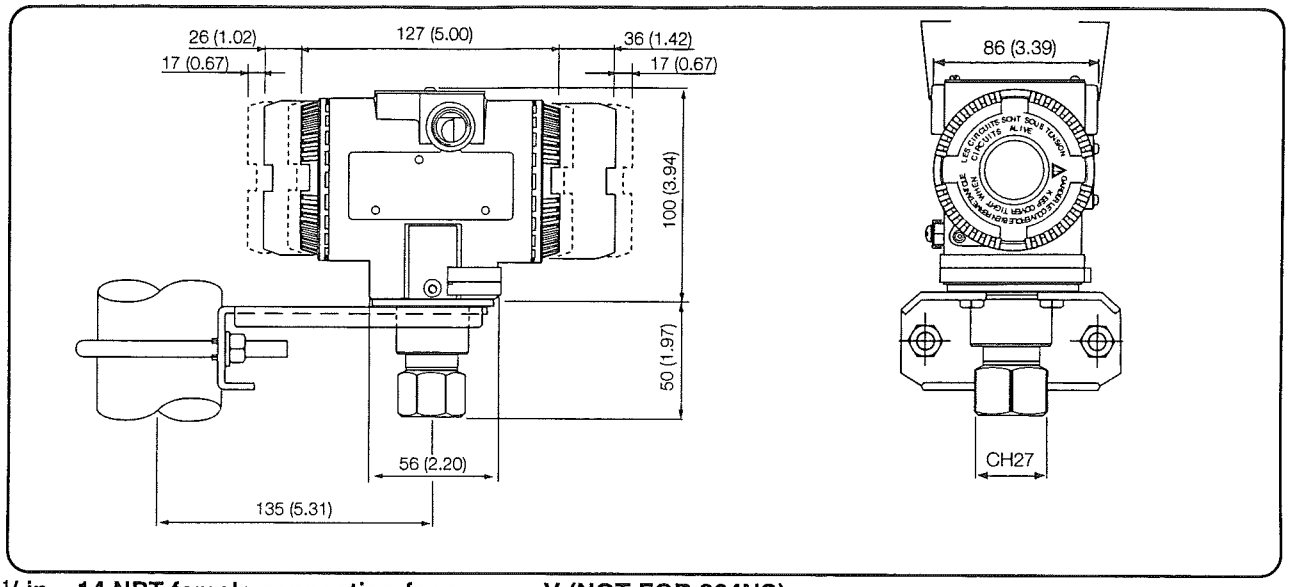

½in – 14 NPT female connection for sensor V (NOT FOR 264NS)

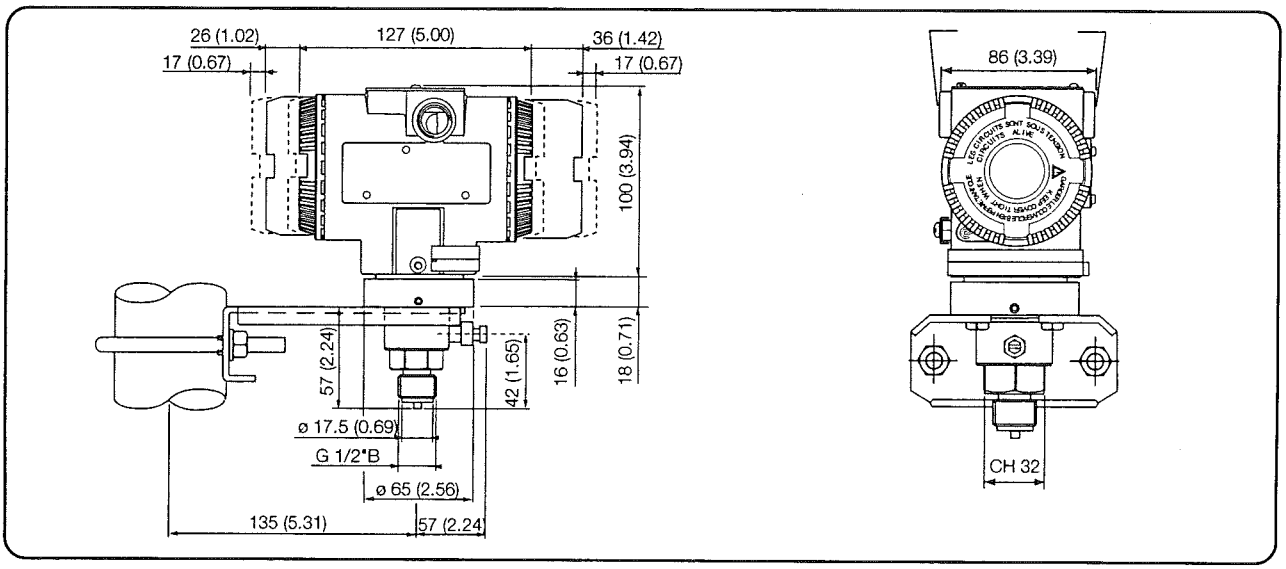

DIN–EN837–1 G ½in B connection for sensors G, H, M, P, Q, S

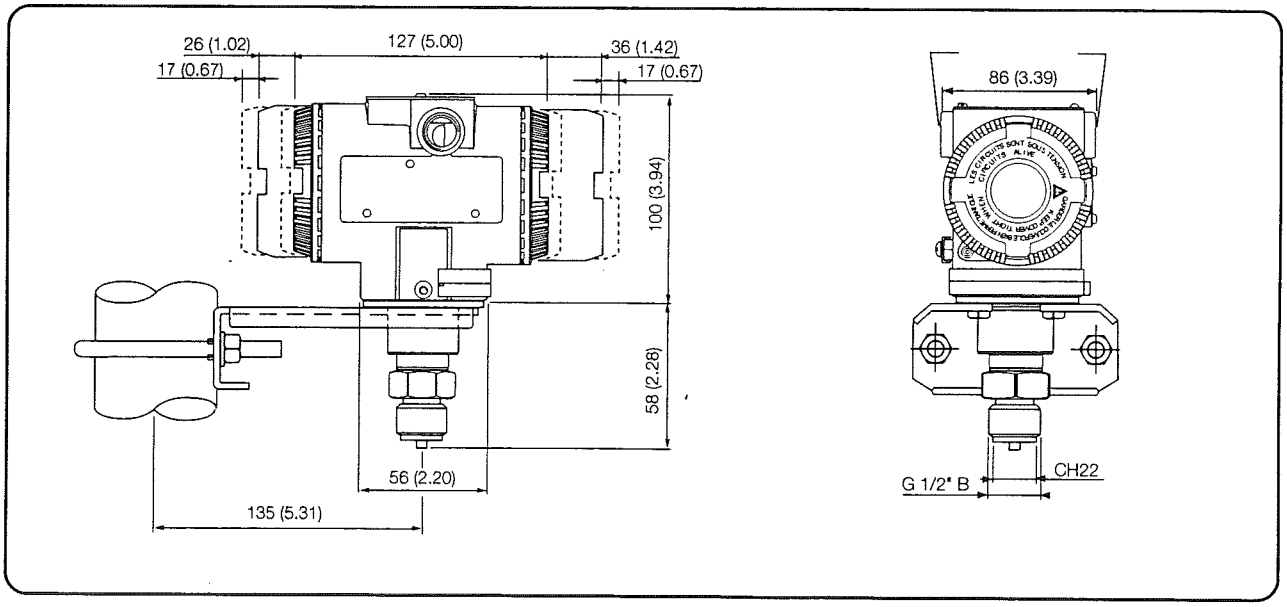

DIN–EN837–1 G ½in B connection for sensor V (NOT FOR 264NS)

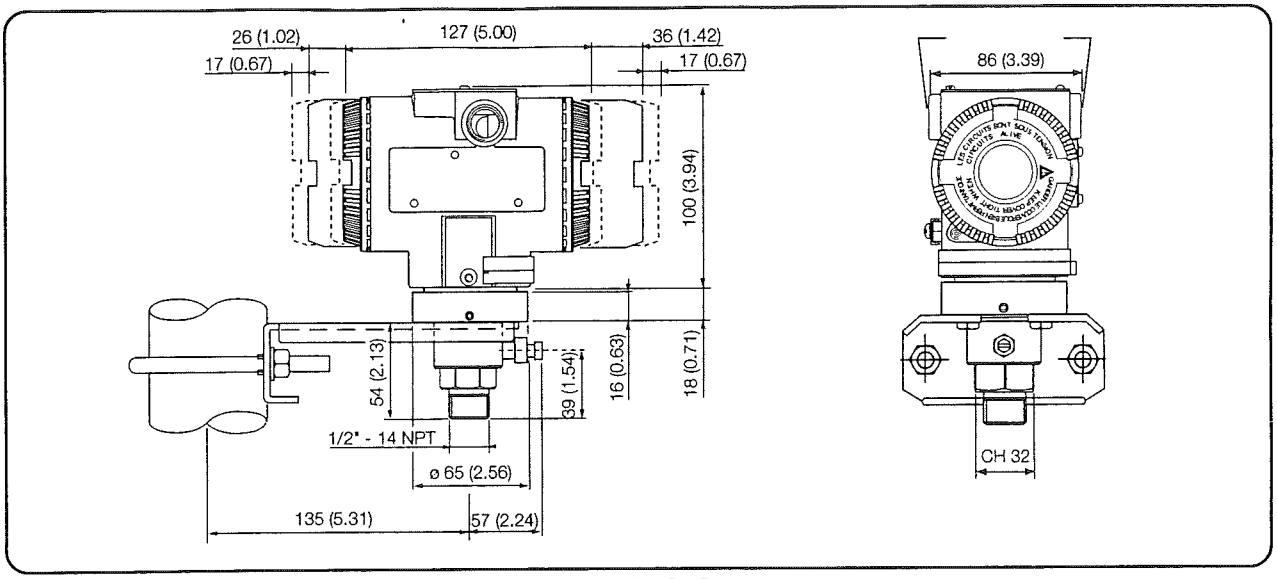

1/2 in – 14 NPT male connection for sensors G, H, M, P, Q, S

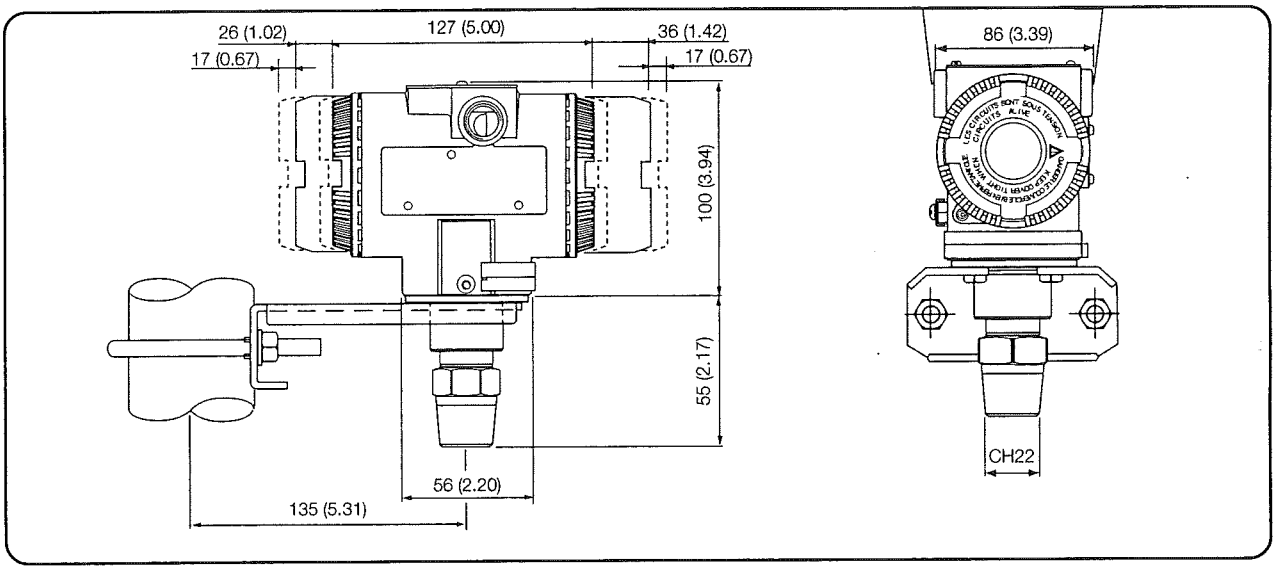

1/2 in – 14 NPT male connection for sensor V (NOT FOR 264NS)

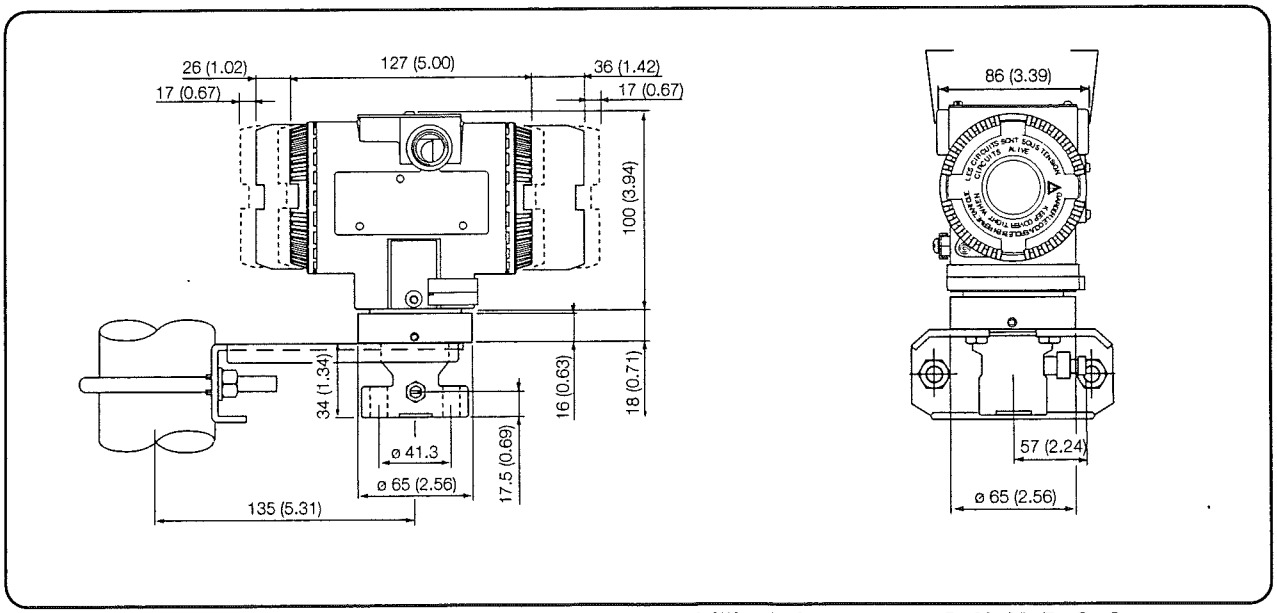

Adapter straight (180°) entry connection (7/16in – 20 UNF drilling) for sensors G, H, M, P, Q, S

ELECTRICAL CONNECTIONS

WARNING - For installation in Hazardous Areas, i.e. areas with danger of fire and/or explosion, prior to making electrical connections, ensure compliance with safety information on the Safety Marking plate. Failure to comply with this warning can result in fire or explosion.

Signal terminals are located in a separate compartment of the secondary unit housing. The housing incorporates two connection ports for cable glands or conduit fittings. They are protected with a temporary plastic plug for transit purpose which should be replaced with a suitable permanent plug in the unused port. Connections can be made by removing the cover (indicated in Fig. 7); first screw down the locking screw located below the cover, using a 3 mm Allen Key.

WARNING - For Hazardous Areas installations,the connection of cables and conduits to the transmitter shall be made in accordance with the requirements of the relevant type of protection. Cables and cable-glands must be in accordance with the type of protection.
Unused openings for connection shall be closed with blanking elements suitable for the relevant type of protection. With the exception of intrinsically safe transmitters, the means provided for this shall be such that the blanking element can be removed only with the aid of tools. The blanking elements must be certified for the type of protection. See standards either EN 60079-14 or IEC 79-14. The transmitter connections must also guarantee the degree of protection of the transmitter enclosure, e.g. IPxx according to EN 60529 standard (or IEC529). See also the Addendum for "IP" protection (and Ex Safety) which is part of this instruction manual.

The signal cable should be connected to the terminals marked respectively (+) and (-). If an internal output meter - either with analog or digital indication - is installed, it should be removed in order to make the connection, simply by pulling it out from its socket. After the connections have been made, reinstall the output meter. Refer to the **Meters Option** addendum for details.

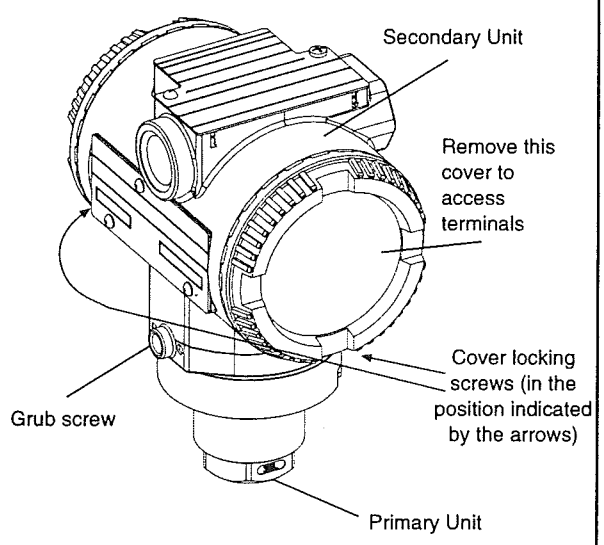

Fig. 7 - Location of the locking screws and terminals

The power to the transmitter is supplied over the signal wiring and no additional wiring is required.The signal wiring does not need to be shielded but the use of a twisted pair is highly recommended. The cable shield should be grounded in one side only, to avoid dangerous earth paths.

WARNING - For Hazardous Areas installations, when the ambient temperature is higher than 70°C, the cable used for the connections must be suitable for 5°C above the ambient temperature.

Normal practice is to ground in the control room side, in which case the field side of the screen should be adequately protected to avoid contact with metallic objects. Signal wiring may be ungrounded (floating) or grounded at any place in the signal loop, but for intrinsically safe installations the wiring and grounding must follow the specific rules for this technique. The transmitter case may be grounded or ungrounded: a ground connection is provided internally (in the terminal compartment) and externally.

Do not run the signal wiring in close proximity to power cable or high power equipment; use dedicated conduits or trays for signal wiring.

CAUTION - Do not connect the powered signal wiring to the mA signal testing terminals as this could damage the by-pass diode.

After the connections have been completed check the integrity of the cover O-ring, screw down the cover and secure it by unscrewing the safety screw.

CAUTION - Unless absolutely necessary, avoid the removal on site of the protective cover which gives access to the electronic circuitry. Although the electronics are fully tropicalized they should not be subjected to humidity for long periods.

WARNING - For Hazardous Areas installations, at least eight (8) threads on each cover must be engaged in order for the transmitter to meet (flameproof - explosion-proof) requirements.

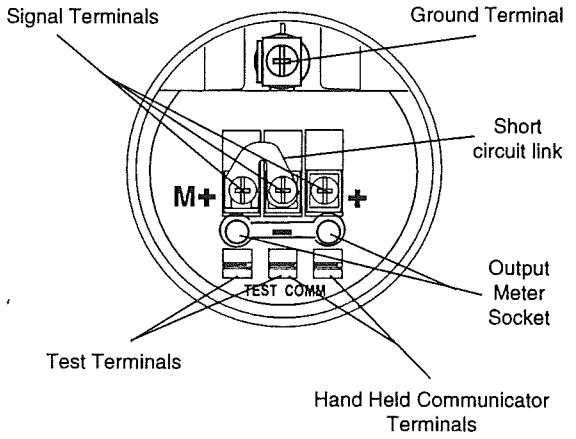

Fig. 8a - Terminals arrangements

WARNING : DO NOT ATTEMPT TO CONNECT AN AMPEROMETER BETWEEN A "TEST" TERMINAL AND A "COMM" TERMINAL. THE RESULT TO THE POWER SUPPLY IS A SHORT WHICH WILL BLOW FUSES AND POSSIBLY DAMAGE YOUR EQUIPMENT, ALSO CAUSING TO INTERRUPT FUNCTION OF OTHER DEVICES POWERED FROM SAME SUPPLY.

NOTE : If the use of the Hand Held Communicator is foreseen, a resistance of 250 ohms minimum **must** be included in the current loop, between the power supply and the connection point of the Hand Held Terminal, for communication purpose.

Here below is given an explanation regarding the possible connection of the terminal block to the power supply and a representation of the connection in case of remote indicator presence.

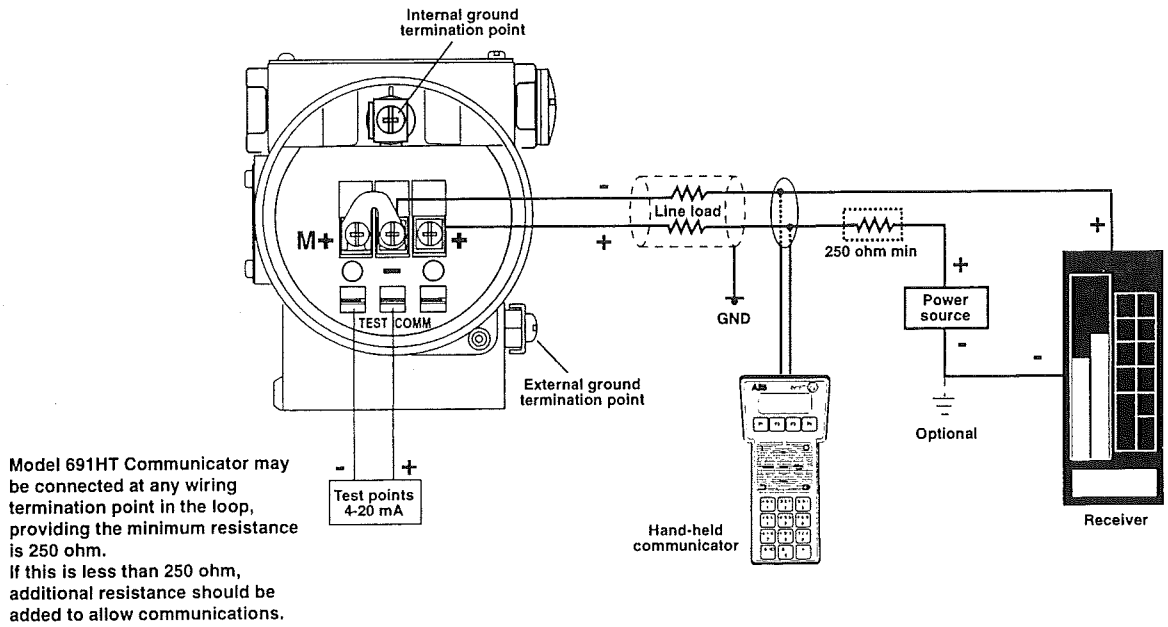

Fig. 8b - Electrical connections

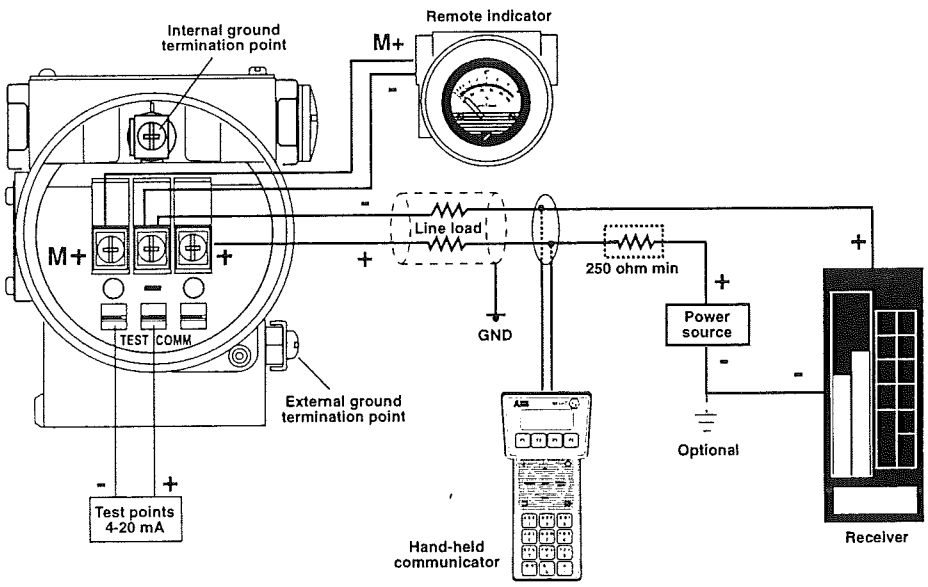

Fig. 8c - Electrical connections with remote indicator

ELECTRICAL REQUIREMENTS

The transmitter operates on a minimum voltage of 10.5 Vdc to a maximum of 42 Vdc and is protected against polarity inversion.

Note - The transmitter operates from 10.5 to 42 Vdc with no load (additional load allows operation over 42 Vdc). For EEx ia and intrinsically safe (FM, CSA and SAA) approval power supply must not exceed 30 Vdc.In some countries the maximum power supply voltage is limited to a lower value.

Installing optional devices the minimum voltage increases to:
- 10.5 Vdc with no option or with integral digital display
- 10.7 Vdc with output analog indicator
- 12.5 Vdc with LCD ProMeter
- 12.3 Vdc with surge protection
- 13.3 Vdc with LCD CoMeter
- 15.3 Vdc with no link on output indicator plug

The total loop resistance is indicated in the expression below.

$$R\ (k\Omega) = \frac{\text{Supply voltage - min. operating voltage (Vdc)}}{22.5}$$

The total loop resistance is the sum of the resistance of all elements of the loop, including wiring, conditioning resistor,safety barriers and additional indicators (excluding the equivalent resistance of the transmitter).

Where a configuration device (HART), such as the Hand Held Communicator or a Modem is likely to be used, a resistance of 250 ohm minimum should be present between the power supply and the point of insertion of these devices, to allow communication.

Several types of safety barriers, either passive or active, can be satisfactorily used in conjunction with the Smart 2600T transmitter. Nevertheless, in case of use of active barriers, check with the supplier if the model is suitable for use with smart transmitters allowing the connection of the configuration devices in the "safe" or non-hazardous area.

Note - For models 262G/A and 264G/A the frequency immunity between 150 kHz and 2 MHz with direct coupling and unshielded line is 3 V; with direct coupling and shielded line is 10 V.

WARNING - The transmitter may be used as a safety accessory (as defined by the Pressure Equipment Directive 97/23/EC) i.e. as part of a shutdown system.
In this case it is recommended to select the correct fail safe mode for the 4-20 mA signal (as per Namur NE43 recommendation).
See also the instructions relevant to fail safe selection (Up/Down scale mode) in the addendum to the instruction manual on "Use of hardware links on the secondary electronics".

RANGE AND SPAN CONSIDERATION

The Smart 2600T Transmitter Specification Sheets provide all information concerning the Range and Span limits in relation to the model and the sensor code.

The terminology currently used to define the various parameters is as follows:

URL : Upper Range Limit of a specific sensor. The highest value of the measured value that the transmitter can be adjusted to measure.

LRL : Lower Range Limit of a specific sensor. The lowest value of the measured value that the transmitter can be adjusted to measure.

URV : Upper Range Value. The highest value of the measured value to which the transmitter is calibrated.

LRV : Lower Range Value. The lowest value of the measured value to which the transmitter is calibrated.

SPAN : The algebric difference between the Upper and Lower Range Values. The minimum span is the minimum value that can be used without degradation of the specified performance.

TURN DOWN RATIO : is the ratio between the maximum span and the calibrated span.

The transmitter can be calibrated with any range between the LRL and the URL with the following limitations:

$$LRL \leq LRV \leq (URL - CAL\ SPAN)$$
$$CAL\ SPAN \geq MIN\ SPAN$$
$$URV \leq URL$$

CALIBRATION

Unlike conventional electronic transmitters, the use of a microprocessor and the presence of serial communications between the transmitter and the configuration device, allows the use of several different approaches in calibration and servicing. Different methods can be used to calibrate the Smart transmitter:

i) **using the local keys in the transmitter secondary unit.**
ii) **using zero/span raise/lower on transmitter electronics links.**
iii) **using the Hand Held Communicator.**
iv) **using the Personal Computer Configuration Software Package.**

This chapter describes the first method; the others are described next or in the relevant Instruction Manuals of configuration tools.
In the addendum (use of hardware links on the secondary electronics) there is an explanation of the raise/lower operation for ZERO and SPAN. In the Analog + HART version it is also possible to apply a scaling to the reading of the transmitter. The operation is called PV-scaling and is used to align the "zero" of the process with the "zero" reading of the transmitter. See the description in the Addendum for PV scaling operation.

Note: Unless otherwise specified the instrument is factory calibrated at maximum span with the LRV set to true zero. Instruments adjusted and tagged for a specific range will not require recalibration. **Rezeroing of the transmitter may be required in order to compensate for zero shift arising from the installation.**

Preliminary operation

Before commencing calibration ensure that:
i) the required span, the upper and lower range value (URV & LRV) are within the span and range limits (URL & LRL) indicated on the nameplate (please refer to "Range and Span" consideration on the previous page).
ii) the transmitter is properly powered and the electrical connections correctly made.
iii) the write protect link, located on the electronics module is in position OFF (write allowed). Access to the link is gained by unscrewing the secondary unit housing cover at the opposite end to the terminal cover (See Fig. 9).
iv) the Upscale/Downscale link is positioned to the required function: ON for Downscale OFF for Upscale (see Fig. 9).
v) make the electrical connections, as indicated in Fig. 10. Connect a precision milliammeter as shown and **remove the short circuit link.**

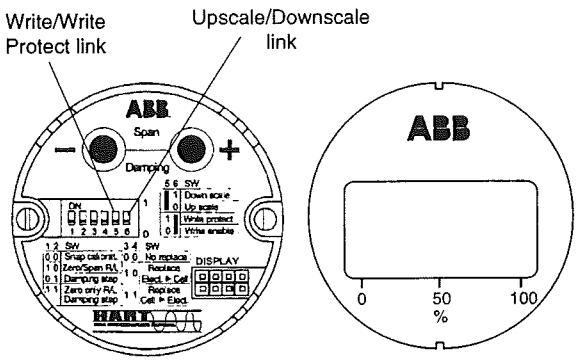

Fig. 9 Location of the links on the electronics and the integral digital display

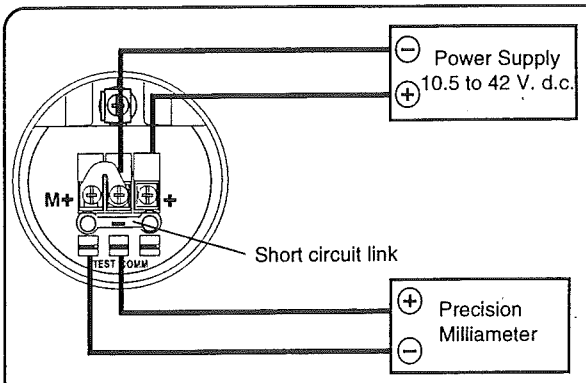

Fig. 10 - Calibration electrical connections

Set up an appropriate test rig in accordance with the required calibration. Figure 11 shows a complete test rig that can be selectively used to suit the calibration.

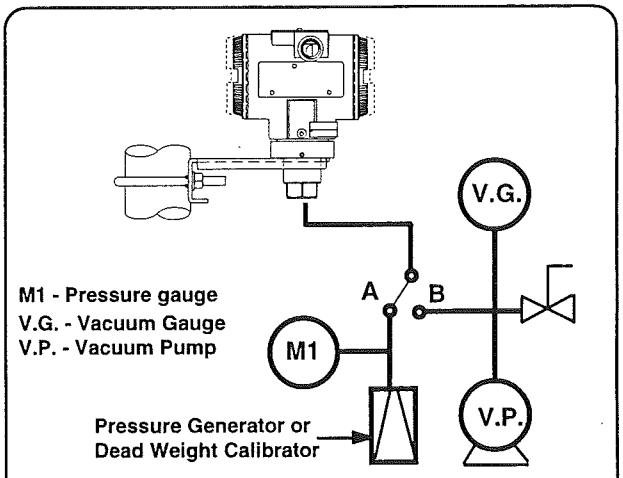

Fig. 11 - Calibration pressure connections

Note that calibration accuracy is strictly related to the accuracy of the test equipment: the use of a dead weight tester is highly recommended.

The local adjustment keys are located behind the Nameplate. To gain access slacken the nameplate screw and rotate 90° ; proceed in the reverse mode when the calibration procedure has been completed. Fig. 12 shows the calibration screws: they provide two large plastic heads that can rotate 90° in the direction indicated by the arrows, with spring-return to normal. The calibration screws can be removed after the calibration, to avoid improper use by inserting a screwdriver blade below the plastic flange and pulling out.

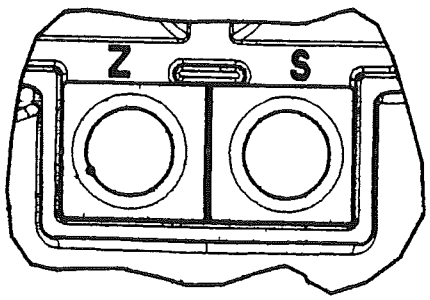

Fig. 12 - Top view of the local adjustment keys

Zero and span - true zero procedure

Gauge pressure

- Set the A-B switch into "A" position

- Switch on the power supply.

- With no pressure applied to the transmitters, the value read on the digital milliammeter should be 4 mA ; if it is not press the zero screw for at least 1 second. After this operation the reading should move to 4 mA; if no change occurs repeat the operation.

- Apply a pressure equal to the upper range value (URV) and allow time for the pressure to stabilize.

- Press the span screw for at least 1 second: after this operation the reading on digital milliammeter should be 20 mA and the calibration procedure is complete. If no change occurs either the calibration procedure was not correctly performed or the span exceeds the limit; correct and repeat the operation.

Absolute pressure

- Set the A-B switch into "B" position

- Switch on the power supply.

- Operate the vacuum pump connected to the transmitter and draw the maximum possible vacuum obtainable. The value read on the digital milliammeter should be 4 mA ; if it is not press the zero screw for at least 1 second. After this operation the reading should move to 4 mA; if no change occurs repeat the operation.

- If the value of the calibration span (URV) is less than atmospheric pressure gently open the vent valve so increasing the pressure to the Upper Range Value. If the calibration span (URV) is greater than the atmospheric pressure then set the A-B switch to "A" position and generate a pressure corresponding to the URV. Allow time for the pressure to stabilize.

- Press the span screw for at least 1 second: after this operation the reading on digital milliammeter should be 20 mA and the calibration procedure is complete. If no change occurs the calibration procedure was not correctly performed or the span exceeds the limit; correct and repeat the operation.

Zero suppression procedure

Gauge pressure

Two different methods (a) or (b) can be used :

a) After completion of the zero and span procedure above, apply a pressure equal to the pressure to be suppressed. Allow time for pressure stabilization and then press the zero screw for at least 1 second. After this operation the digital milliammeter reading should be 4mA and the Upper Range Value automatically moved to a value equal to the sum of the pressure to be suppressed and the previous calibrated span.

b) Use the zero and span procedure above but apply pressures equal to the Lower Range Value (LRV) and then to Upper Range Value (URV), and pressing, for at least 1 second, the zero and span screws respectively.

Absolute pressure

Use the zero and span procedure above but apply to the process connection absolute pressures equal to the Lower Range Value (LRV) and then to the Upper Range Value (URV), pressing, for at least 1 second, the zero and span screws respectively.

Zero elevation procedure

This procedure applies to the gauge pressure transmitter, only. The zero can be elevated up to a full vacuum.
Apply pressures equal to the LRV (this value is therefore between the zero gauge pressure and the full vacuum) and then equal to the upper range value (URV) and correspondingly press the zero and span screws respectively.

> ✳ **NOTE** - To prevent unauthorized calibration operation refit the write protection link in position P (Write Protect).

> ✳ **Note** - If during the calibration procedure the readings on the digital milliammeter are outside its inherent accuracy, output trimming of the transmitter may be requested. This operation can only be performed using the Hand Held Terminal Communicator or the Personal Computer Configurator. If this equipment is not available the transmitter should be returned to a Service Center for recalibration.

In some cases, expecially for tank level measurement, the calibration can also be obtained automatically by the indication of the actual output percentage, without any calculation for LRV and URV. The operation is called Output % Reranging and can be performed using a HART configuration tool (see the "Addendum for flange-mounted transmitter").

DISMANTLING AND REASSEMBLY

WARNING - Process fluids and/or pressure retained in the transmitter primary unit can cause severe injury and death or damage to the equipment. It is the user responsibility to make sure that the instrument is not under pressure before removing the instrument from service or when draining or venting.

Dangerous fluids

In case of toxic or otherwise dangerous process fluid, take any precautions as recommended in the relevant Material Safety Data Sheet.

CAUTION - Dismantling and reassembly should not be carried out on site because of the risk of damage to components and printed circuits as a result of adverse environmental conditions such as humidity,dust,etc. The dismantling and reassembly procedures given below should be carried out in the listed order to avoid instrument damage.

Required tools

2 mm Allen key
3 mm Allen key
Small Phillips screwdriver
Small flat-bladed screwdriver
13 mm spanner
13 mm torque wrench - (Range > 17 Nm - 12.6 foot lbs)

Dismantling

a) Screw down completely the cover locking screw, electronics side, using the 3 mm Allen key
b) Unscrew and remove the covers
c) Unscrew the two fixing screws and remove the secondary electronic assembly
d) Unplug the sensor cable
e) Remove the tang grub screw using the 2 mm Allen key
f) Unscrew the housing taking care not to damage the sensor cable or the connector.

Reassembly

WARNING - Assembling the components with improper "O rings" can cause fracture or overstressing and release of pressurized process material. Use only official spare parts (*) and do not exceed the specified torque limits. DO NOT REMOVE the "O ring" fitted in the sensor neck: it provides the housing a degree of protection.

a) Insert the sensor cable in its recess at the bottom of the housing.
b) Screw the housing down completely until the nesting of housing/sensor assy is reached, then unscrew by one complete turn maximum. Rotate the topwork in the desired position and lock it with the tang grub screw previously removed.
c) Plug the sensor cable to the secondary electronics. Fix the electronic circuit by its screws.
d) Refit the covers and tighten securely.

WARNING - For Hazardous Areas installations, at least eight (8) threads on the cover must be engaged in order to meet the (flameproof - explosion-proof) requirements.

e) Unscrew the cover locking screw to secure the covers. This is **mandatory** to meet **"Flameproof requirements" for Hazardous Areas installation.**

PRESSURE TEST WARNING

Once reassembled the process flanges and the transducer, a pressure test is required. At this purpose, apply a hydrostatic pressure of the maximum overrange pressure rating to both process connections simultaneously. Wait for one minute, then verify that no leakages occurred. Repeat the assembly procedure and the pressure test.

(*) The spare parts list is available at: www.abb.com
- searching for: SL262_4H.pdf
or from local ABB representatives.

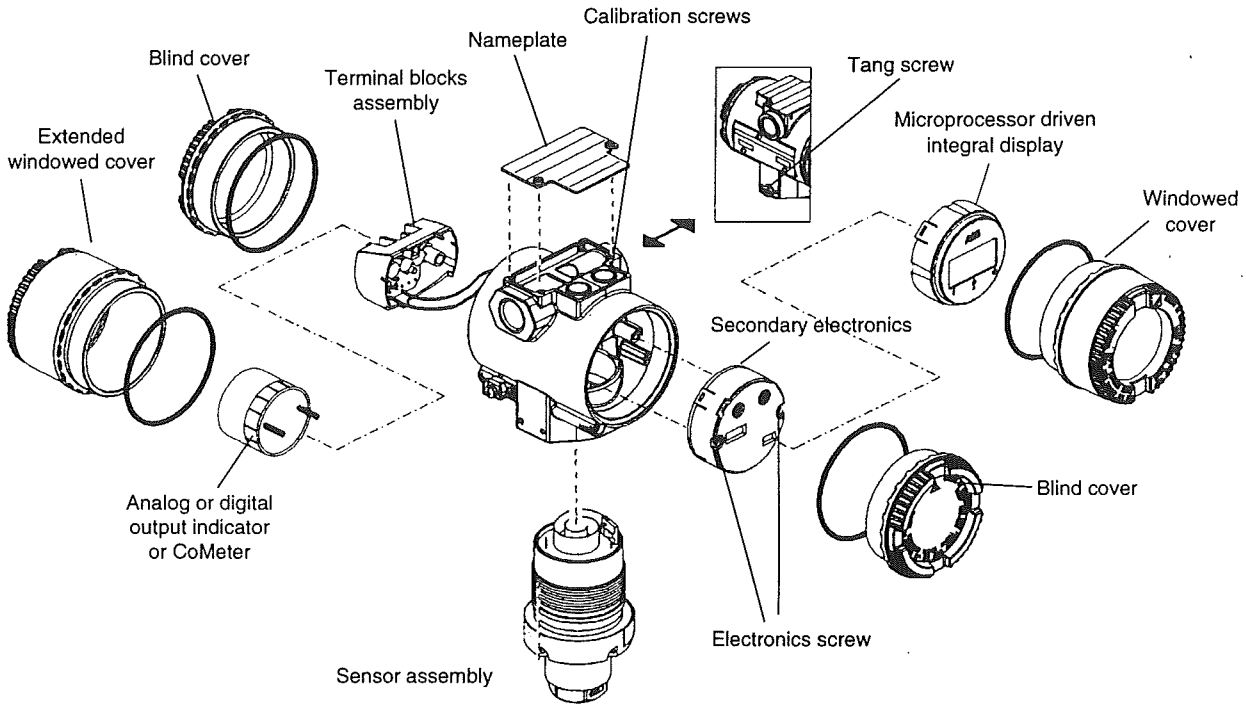

Fig. 13a - Transmitter Sectional View for models 264 HS-NS

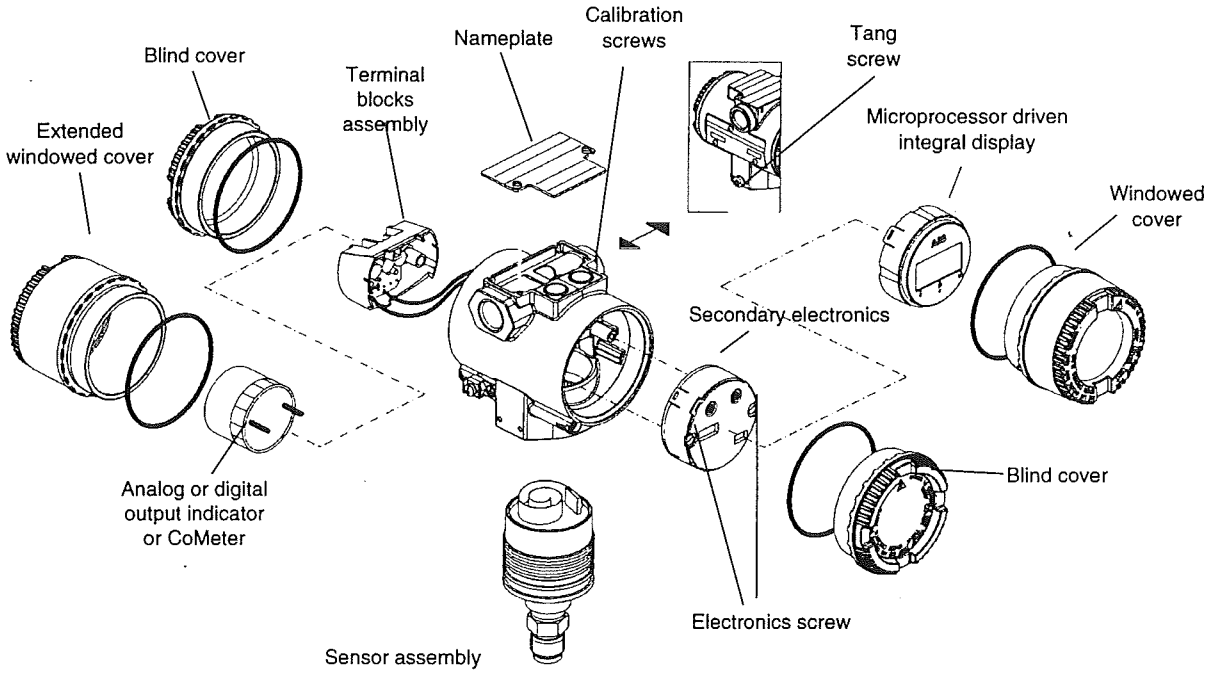

Fig. 13b - Transmitter Sectional View for models 262/264 GS-AS

SIMPLE FAULT FINDING (HART)

This part is applicable only for a quick fault finding in the case that the Hand Held Terminal or the P.C. Configurator Package are not available.
If the transmitter does not appear to be working satisfactory, carry out the following fault finding checks before contacting your nearest Service Centre.
If the instrument is to be returned for repair, ensure that it is adequately packed using the original polystyrene box or high density chip foam: **the trouble sheet/returning form should be sent with the instrument, filled in all its parts.** If the transmitter needs to be dismantled follow the procedures of the previous section.

WARNING : If the transmitter forms part of a control loop, the plant must be placed under local manual control while the instrument is examined or taken out of service. Take all precautions to avoid damages caused by pressure or dangerous fluids release.

Equipment needed
Voltmeter , milliammeter (0 to 100 mA d.c.), solvent contact cleaner.

High, Low or Irregular Output

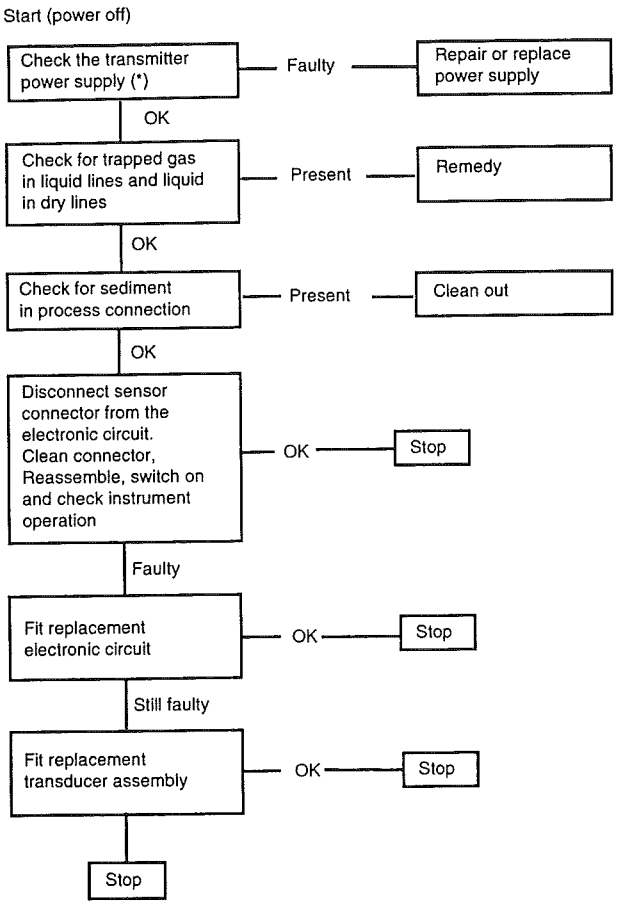

No output

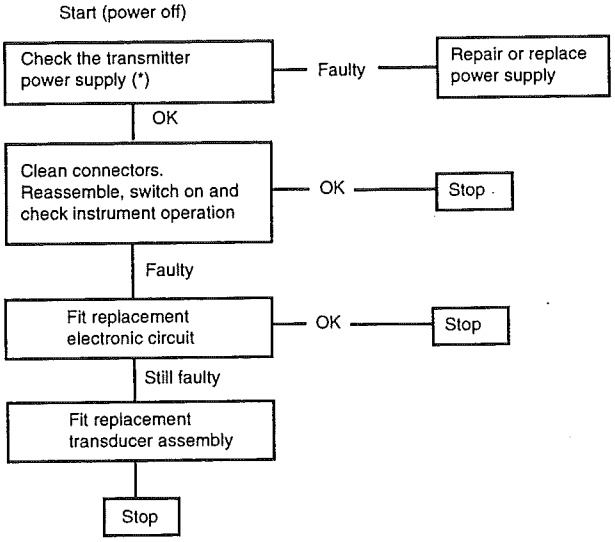

WARNING - If the transmitter needs to be repaired, the faulty unit/assembly must be replaced by an equivalent unit/assembly.

(*) If the source of the problem is suspected to be the power supply, check it by disconnecting the wires from the transmitter and testing the volts available at the wires.

ABB

TROUBLE SHEET

WARRANTY REPAIR ☐ ☐ REPAIR ORDER

Rejection or discrepancy reports — Copy attached ☐ Not available ☐

- IDENTIFICATION

Customer

Purchase order No.

Plant

Name of person to contact

Instrument tag No.

Model

Serial No.

- OPERATING CONDITIONS

Specify location, environmental conditions, type of service and approximate number of operating hours or date of installation if known.

- REASON FOR RETURN

- DANGEROUS FLUIDS

In case of toxic or otherwise dangerous process fluid, please attach the relevant Material Safety Data Sheet.

Trouble found during : Installation ☐ Commissioning ☐ Maintenance ☐

At start up ☐ On service ☐

Shipping information for the return of the equipment

Material returned for factory repair, should be sent to the nearest ABB Service Center, transportation charges prepaid by the Purchaser.

Please enclose this sheet duly completed to cover letter and packing list

Date	Signature	Originator

Operating instruction
IM/262_4D_7

Field^{IT}

2600T Series Pressure Transmitters

Models 262B/D/V/P
Models 264B/D/V/P

Industrial^{IT} enabled

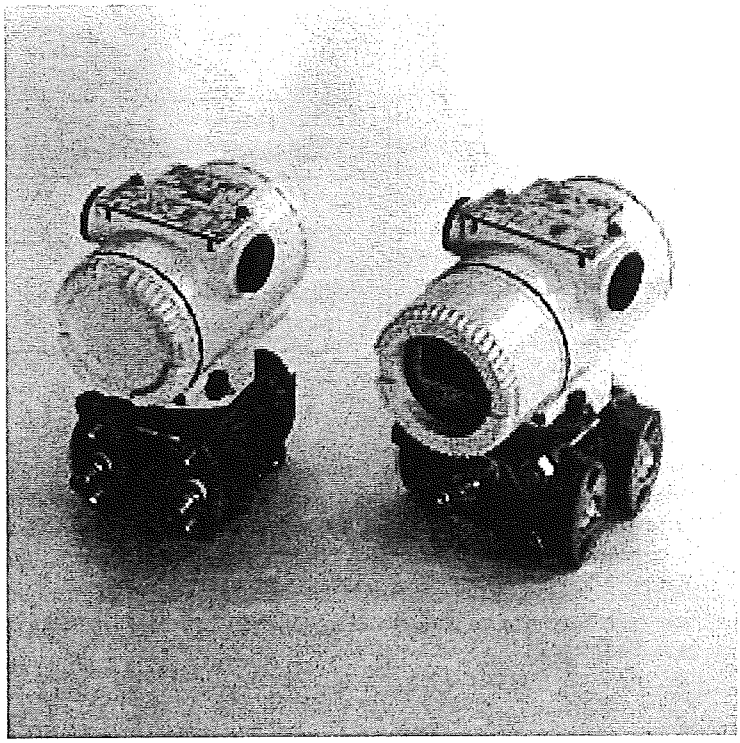

ABB

The Company

We are an established world force in the design and manufacture of instrumentation for industrial process control, flow measurement, gas and liquid analysis and environmental applications.

As a part of ABB, a world leader in process automation technology, we offer customers application expertise, service and support worldwide.

We are committed to teamwork, high quality manufacturing, advanced technology and unrivalled service and support.

The quality, accuracy and performance of the Company's products result from over 100 years experience, combined with a continuous program of innovative design and development to incorporate the latest technology.

The NAMAS Calibration Laboratory No. 0255(B) is just one of the ten flow calibration plants operated by the Company, and is indicative of our dedication to quality and accuracy.

EN ISO 9001: 1994

Cert. No. Q5907

ISO 9001: 2000

Cert. No. 9/90A

UKAS CALIBRATION 0255

Cert. No. 0255

Use of Instructions

Warning.
An instruction that draws attention to the risk of injury or death.

Note.
Clarification of an instruction or additional information.

Caution.
An instruction that draws attention to the risk of damage to the product, process or surroundings.

Information.
Further reference for more detailed information or technical details.

Although **Warning** hazards are related to personal injury, and **Caution** hazards are associated with equipment or property damage, it must be understood that operation of damaged equipment could, under certain operational conditions, result in degraded process system performance leading to personal injury or death. Therefore, comply fully with all **Warning** and **Caution** notices.

Information in this manual is intended only to assist our customers in the efficient operation of our equipment. Use of this manual for any other purpose is specifically prohibited and its contents are not to be reproduced in full or part without prior approval of Technical Communications Department, ABB.

Health and Safety

To ensure that our products are safe and without risk to health, the following points must be noted:

1. The relevant sections of these instructions must be read carefully before proceeding.
2. Warning labels on containers and packages must be observed.
3. Installation, operation, maintenance and servicing must only be carried out by suitably trained personnel and in accordance with the information given. Any deviation from these instructions, will transfer the complete liability to the user.
4. Normal safety precautions must be taken to avoid the possibility of an accident occurring when operating in conditions of high pressure and/or temperature.
5. Chemicals must be stored away from heat, protected from temperature extremes and powders kept dry. Normal safe handling procedures must be used.
6. When disposing of chemicals ensure that no two chemicals are mixed.

Safety advice concerning the use of the equipment described in this manual or any relevant hazard data sheets (where applicable) may be obtained from the Company address on the back cover, together with servicing and spares information.

Section	Page

INTRODUCTION 3
TRANSPORT, STORAGE, HANDLING AND PRODUCT IDENTIFICATION 4
PRINCIPLE OF OPERATION 5
INSTALLATION 7
ELECTRICAL CONNECTIONS 8
ELECTRICAL REQUIREMENTS 10
RANGE AND SPAN CONSIDERATION 10
CALIBRATION 11
DISMANTLING AND REASSEMBLY 13
SIMPLE FAULT FINDING 16
RETURNING FORM 17

INTRODUCTION

The **2600T** series is a modular range of field mounted, microprocessor based electronic transmitters, using a unique inductive sensing element. Accurate and reliable measurement of differential pressure, gauge and absolute pressure, flow and liquid level is provided, in the even most difficult and hazardous industrial environments.

The 2600T Smart series transmitter now includes an Analog Version plus HART digital communication, a Profibus DP-PA and a Fieldbus FOUNDATION version.

Digital communication protocols allow remote re-ranging, calibration and diagnostics.

With respect to HART, the bidirectional digital communication does not have any interference with the standard 4-20 mA analog output signal.

Profibus has a complete digital only communication, as well as for Fieldbus FOUNDATION.

This manual describes the features, the installation and calibration procedures related to the 2600T Series Transmitter with HART Communication Protocol.

The 2600T series also gives the opportunity to utilize capacitive and piezo-resistive sensing element for certain models and applications.

SUPPLEMENTARY DOCUMENTATION

Reference information on remote seals and configuration of the transmitter can be found in the following documents:

SS/S264x	Remote Seal Specification
SS/264xx	Data Sheets
SL/2600T	Spare Part List
IM / 691HT	Hand-Held Communicator

Online HELP SMART VISION Configuration Program

TRANSPORT

After final calibration, the instrument is packed in a carton (Type 2 to ANSI/ASME N45.2.2-1978), intended to provide protection from physical damage.

STORAGE

The instrument does not require any special treatment if stored as despatched and within the specified ambient conditions level (Type 2 to ANSI/ASME N45.2.2-1978).
There is no limit to the storage period, although the terms of guarantee remain as agreed with the Company and as given in the order acknowledgement.

HANDLING

The instrument does not require any special precautions during handling although normal good practice should be observed.

PRODUCT IDENTIFICATION

The instrument is identified by the data plates shown in Figure 1.
The Nameplate (ref.A) provides information concerning the code number, maximum process working pressure, range and span limits, power supply and output signal. See code/ specification sheet for detailed information. This plate also shows the transmitter serial number.
Please refer to this number when making enquiries.
A dedicated label (ref. B) is welded as standard to the primary unit, carrying specific details of the transducer (diaphragms material, fill fluid, range limit and identification number).
A Safety Marking plate (ref. C) is fitted when the transmitter is required to comply with hazardous area regulations, e.g. flameproof, intrinsic safety or both protection type combined.
Additionally Tag plate (ref. D) provides the customer tag number and calibrated range, maximum process working pressure (PS) and temperature (TS).
The instrument may be used as a safety accessory (category IV) as defined by the Pressure Equipment Directive 97/23/EC. In this case, near the CE mark, there is the number of the notified body (1130) that verified the compliance.

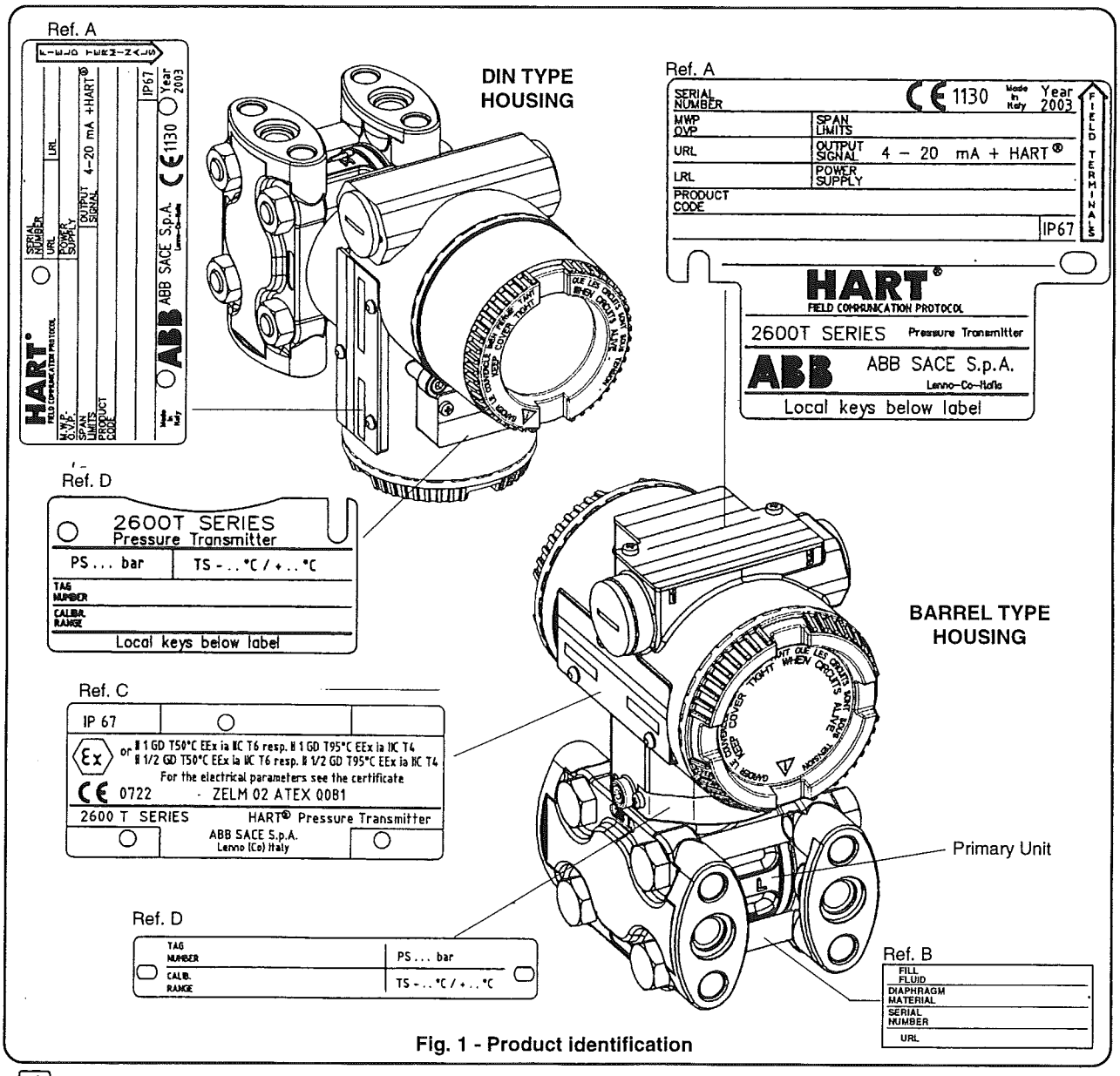

Fig. 1 - Product identification

Important - The instrument serial number must always be quoted when making enquiries.

PRINCIPLE OF OPERATION

MODELS: 262/264 D-V-P

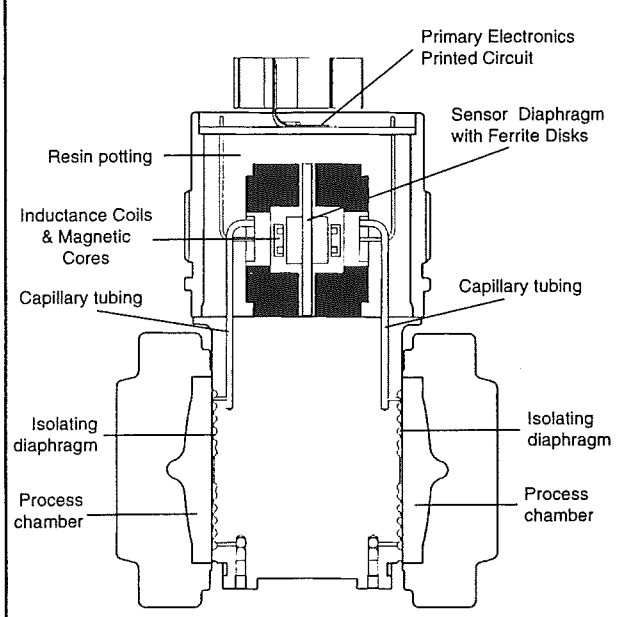

Fig. 2a - Primary Unit

The instrument consists of two functional units:
- Primary Unit
- Secondary Unit

The Primary Unit includes the process interface and the sensor, the Secondary Unit includes the electronics, the terminal block and the housing. The two units are mechanically coupled by a threaded joint. The Electronics of Secondary Unit is based on custom integrated components (Application Specific Integrated Circuit - ASIC).
The principle of operation of the Primary Unit is as follows. The process fluid (liquid, gas or vapour) exerts pressure on to the sensor diaphragm via flexible, corrosion-resistant isolating diaphragms and capillary tubing containing the fill fluid (see Fig. 2a). This is for inductive principle.

As the sensor diaphragm deflects in response to differential pressure changes, it simultaneously produces variations in the gap between two fixed magnetic circuits (comprising coil and ferrite core) positioned on both sides of the measuring diaphragm. As a result, the inductance of each coil changes. The two inductance values L1 and L2, and the sensor temperature ST are combined in the primary electronics to provide a proprietary standardized signal.
In the manufacturing process the sensor output characteristics are compared with reference pressures and temperatures: the "mapped" parameters are then stored in the memory of Primary electronics.

While maintaining the modular construction, it may be adopted a sensor module different then the inductive one. The sensor can be piezoresistive. The completely welded sensor module is a twin-chamber system with an integral overload diaphragm, an internal absolute pressure sensor and a silicon differential pressure sensor.
The absolute pressure sensor, which is only exposed to the pressure at the high pressure side, acts as a reference value to compensate for the static pressure.
The differential pressure sensor is connected via a capillary tube to the negative side / the reference vacuum of the sensor module. The applied differential pressure (dp) / absolute pressure (pabs) is transferred via the separating diaphragm and the fill fluid to the diaphragms of the silicon differential pressure sensor.
A minimal deflection of the silicon diaphragm changes the output voltage of the pick-up system. This output voltage, proportional to the pressure, is converted by the matching unit and the amplifier into an electrical signal.
Depending on the model, the transmitter is connected to the process by means of oval flanges with fixing threads according to DIN 19213 (M10/M12) or 7/16 - 20 UNF, 1/4 - 18 NPT Female thread or remote seal.

The measured values and the sensor parameters are transferred to the Secondary Unit, where a microprocessor computes precise primary output linearisation, compensating for the combined effects of sensor non linearity, of static pressure and temperature changes. In the secondary electronics permanent memory are stored the transmitter specific information:
- non modifiable data such as the serial number, the UID (Unique Identifier), the manufacturer's name and device type, the hardware and software version of the electronics.
- the modifiable data such as the final trimming and calibration, in other words, all data that can be changed by the user through the configuration devices.

MODELS 262/264 B

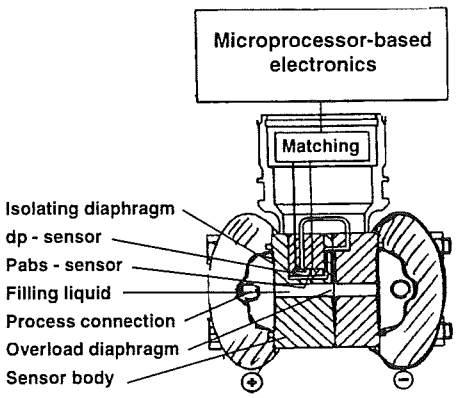

Fig. 2b - Piezoresistive sensor for differential pressure

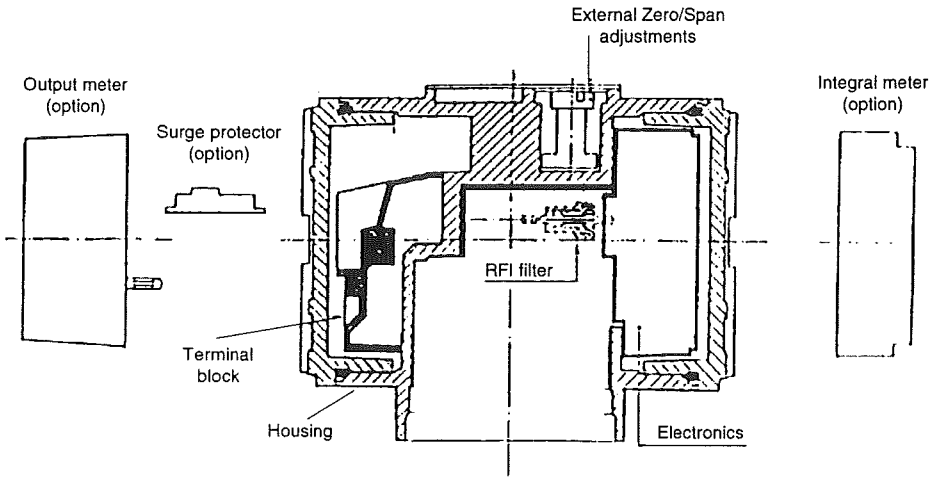

Fig. 2d - Secondary Unit

The microprocessor receives data from the internal modem, in order to provide bidirectional digital communication with the configuration device, i.e. the Hand Held terminal "Communicator" or P.C. based "Configurator".

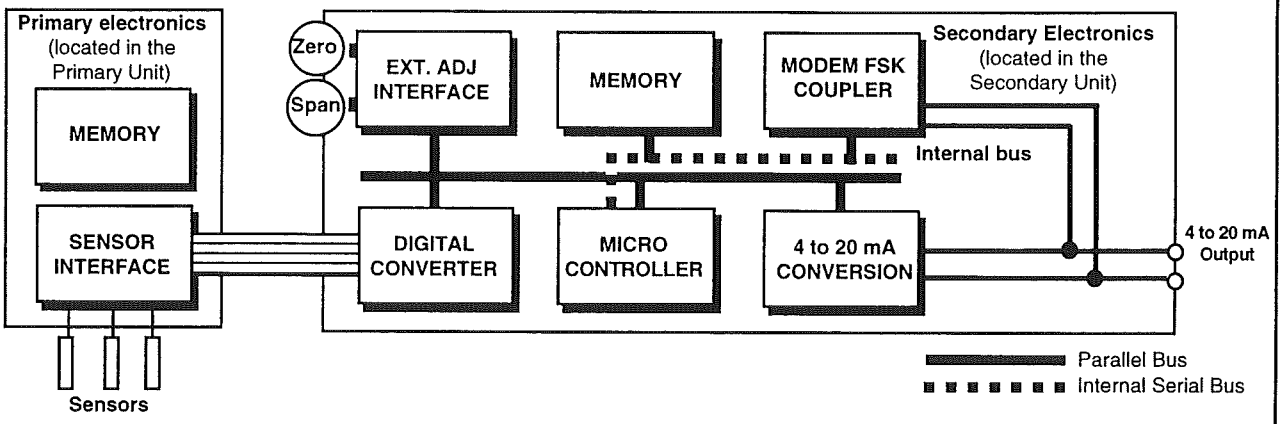

Fig. 3 - Functional Block Diagram

With secondary electronics analog+HART, it is to be consider that different communication protocols exist for configuration and maintenance operations. Here follows a brief description on the matter; please refer to appropriate technical specification for additional deeper explanations on the communication aspects.

The HART protocol is based on the standard Bell 202 FSK (Frequency Shift Keying) with a ±0.5 mA signal modulation superimposed on the 4 to 20 mA analog signal. As the energy balance added to the current loop is virtually zero and the frequency is very high compared to that of the process dynamic, the analog process signal remains undisturbed.

Using a configuration device it is then possible to remotely modify the configuration of the transmitter, e.g. the measuring range.
It is also possible to read other transmitter data and diagnostic information. Limited rezeroing and respanning, comparable to that conventional analog transmitters is possible using the optional calibration device. Refer to Fig. 3 for a complete view of the Functional Block Diagram.

The sensor and all electronic parts are galvanically isolated from the transmitter body.

INSTALLATION

WARNING - For installation in Hazardous Areas, i.e. areas with dangerous concentrations of e.g. gases or dusts that may explode if ignited, the installation must be carried out in accordance with relative standards either EN 60079-14 or IEC 79-14 and/or with local authority regulations, for the relevant type of protection adopted. Together with safety information here and after enclosed see also the Addendum for "Ex Safety" aspects which is part of this instruction manual.

WARNING - In order to ensure operator safety and plant safety it is essential that installation is carried out by suitably trained personnel according to the technical data provided in the Data Sheet for the relevant model included in the supplementary documentation, in particular in the "Operative limits" section.

The transmitter may be mounted on a vertical or horizontal 2-inch pipe (figg. 4 and 5) by means of the same mounting bracket.

Note: for other installation details see the relevant Addendum.

WARNING: The transmitter when installed in accordance with this instruction manual will not be subjected to mechanical stresses.

WARNING: the transmitter should not be installed where it may be subjected to mechanical and thermal stresses. ABB cannot guarantee that a construction material is suited to a particular process fluid under all possible process conditions. Therefore it is the user responsibility the selection of suitable wetted parts materials and filling fluid.

The secondary unit of the transmitter may be rotated through 360° approx. with respect to the primary unit without degrading performance or damaging the internal wiring. Do not force the primary unit to rotate; use the 2 mm Allen key supplied to unlock and lock the tang grub screw (see Fig. 7). This feature, obtained by unscrewing (one turn is sufficient) the Allen screw, is particularly useful for reaching optimum access to the electrical connections and visibility of the output indicator.

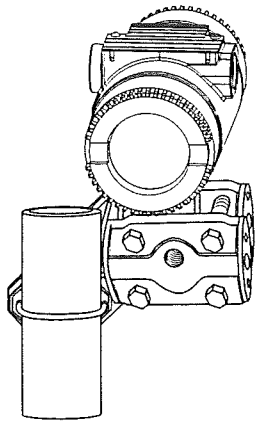

Fig. 4 - Mounting on 2" vertical pipe

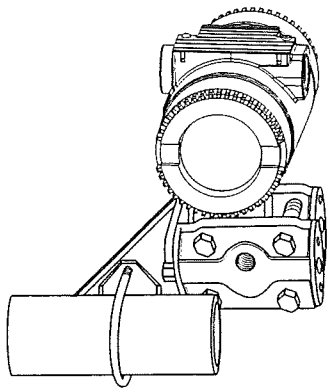

Fig. 5 - Mounting on 2" horizontal pipe

CAUTION - Proper location of the transmitter with respect to the process pipe will depend upon the service for which the instrument is used. Care should be exercised to identify correct process connections.

Note: High side may be marked H or +
Low side may be marked L or -

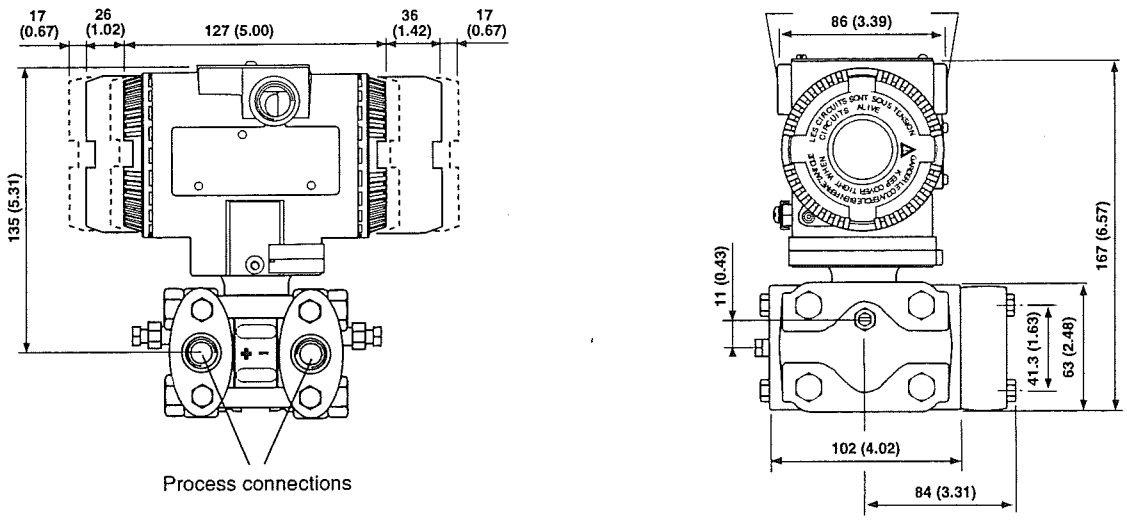

Fig. 6 - Dimensional drawings (Differential pressure transmitter) with process connections

Note: dimensions are expressed in mm. (Between parenthesis the same dimensions expressed in inches).

ELECTRICAL CONNECTIONS

WARNING - For installation in Hazardous Areas, i.e. areas with danger of fire and/or explosion, prior to making electrical connections, ensure compliance with safety information on the Safety Marking plate. Failure to comply with this warning can result in fire or explosion.

Signal terminals are located in a separate compartment of the secondary unit housing. The housing incorporates two connection ports for cable glands or conduit fittings. They are protected with a temporary plastic plug for transit purpose which should be replaced with a suitable permanent plug in the unused port. Connections can be made by removing the cover (indicated in Fig. 7); first screw down the locking screw located below the cover, using a 3 mm Allen Key.

WARNING - For Hazardous Areas installations,the connection of cables and conduits to the transmitter shall be made in accordance with the requirements of the relevant type of protection. Cables and cable-glands must be in accordance with the type of protection.
Unused openings for connection shall be closed with blanking elements suitable for the relevant type of protection. With the exception of intrinsically safe transmitters, the means provided for this shall be such that the blanking element can be removed only with the aid of tools. The blanking elements must be certified for the type of protection. See standards either EN 60079-14 or IEC 79-14. The transmitter connections must also guarantee the degree of protection of the transmitter enclosure, e.g. IPxx according to EN 60529 standard (or IEC529). See also the Addendum for "IP" protection (and Ex Safety) which is part of this instruction manual.

The signal cable should be connected to the terminals marked respectively (+) and (-). If an internal output meter - either with analog or digital indication - is installed, it should be removed in order to make the connection, simply by pulling it out from its socket. After the connections have been made, reinstall the output meter. Refer to the **Meters Option** addendum for details.

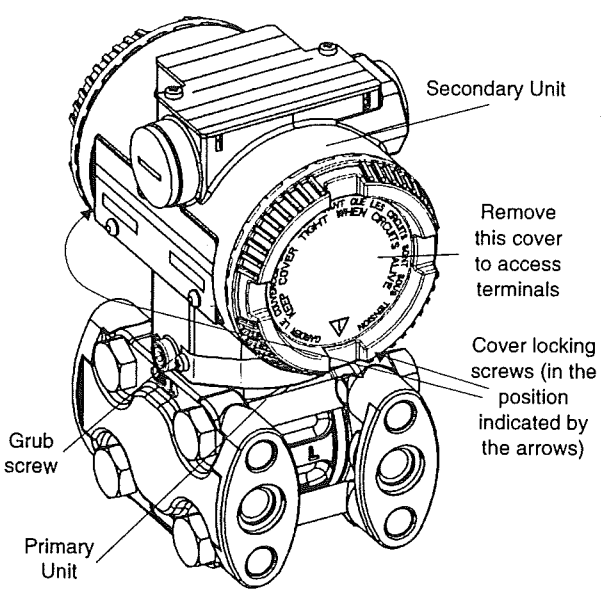

Fig. 7 - Location of the locking screws and terminals

The power to the transmitter is supplied over the signal wiring and no additional wiring is required.The signal wiring does not need to be shielded but the use of a twisted pair is highly recommended. The cable shield should be grounded in one side only, to avoid dangerous earth paths.

WARNING - For Hazardous Areas installations, when the ambient temperature is higher than 70°C, the cable used for the connections must be suitable for 5°C above the ambient temperature.

Normal practice is to ground in the control room side, in which case the field side of the screen should be adequately protected to avoid contact with metallic objects. Signal wiring may be ungrounded (floating) or grounded at any place in the signal loop, but for intrinsically safe installations the wiring and grounding must follow the specific rules for this technique. The transmitter case may be grounded or ungrounded: a ground connection is provided internally (in the terminal compartment) and externally.

Do not run the signal wiring in close proximity to power cable or high power equipment; use dedicated conduits or trays for signal wiring.

CAUTION - Do not connect the powered signal wiring to the mA signal testing terminals as this could damage the by-pass diode.

After the connections have been completed check the integrity of the cover O-ring, screw down the cover and secure it by unscrewing the safety screw.

CAUTION - Unless absolutely necessary, avoid the removal on site of the protective cover which gives access to the electronic circuitry. Although the electronics are fully tropicalized they should not be subjected to humidity for long periods.

WARNING - For Hazardous Areas installations, at least eight (8) threads on each cover must be engaged in order for the transmitter to meet (flameproof - explosion-proof) requirements.

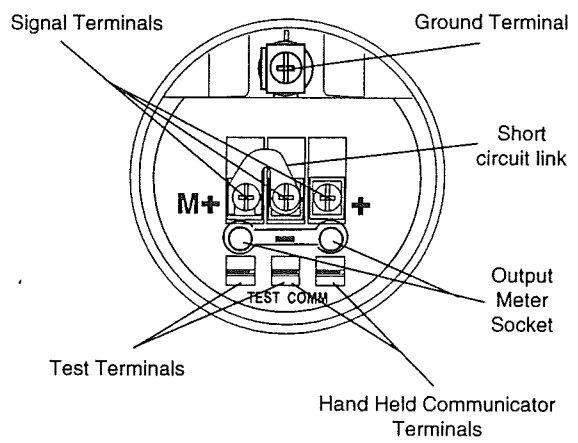

Fig. 8a - Terminals arrangements

WARNING : DO NOT ATTEMPT TO CONNECT AN AMPEROMETER BETWEEN A "TEST" TERMINAL AND A "COMM" TERMINAL. THE RESULT TO THE POWER SUPPLY IS A SHORT WHICH WILL BLOW FUSES AND POSSIBLY DAMAGE YOUR EQUIPMENT, ALSO CAUSING TO INTERRUPT FUNCTION OF OTHER DEVICES POWERED FROM SAME SUPPLY.

NOTE: If the use of the Hand Held Communicator is foreseen, a resistance of 250 ohms minimum **must** be included in the current loop, between the power supply and the connection point of the Hand Held Terminal, for communication purpose.

Here below is given an explanation regarding the possible connection of the terminal block to the power supply and a representation of the connection in case of remote indicator presence.

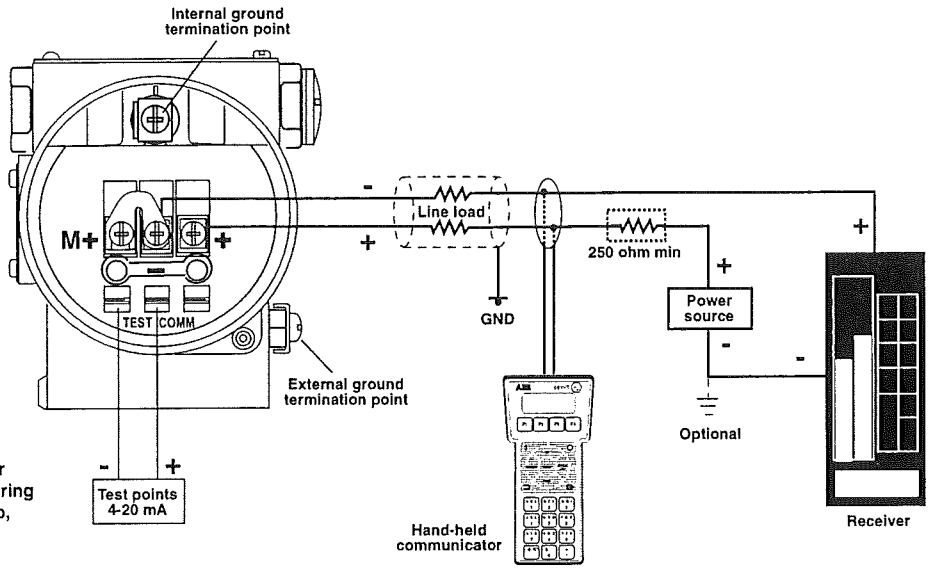

Model 691HT Communicator may be connected at any wiring termination point in the loop, providing the minimum resistance is 250 ohm.
If this is less than 250 ohm, additional resistance should be added to allow communications.

Fig. 8b - Electrical connections

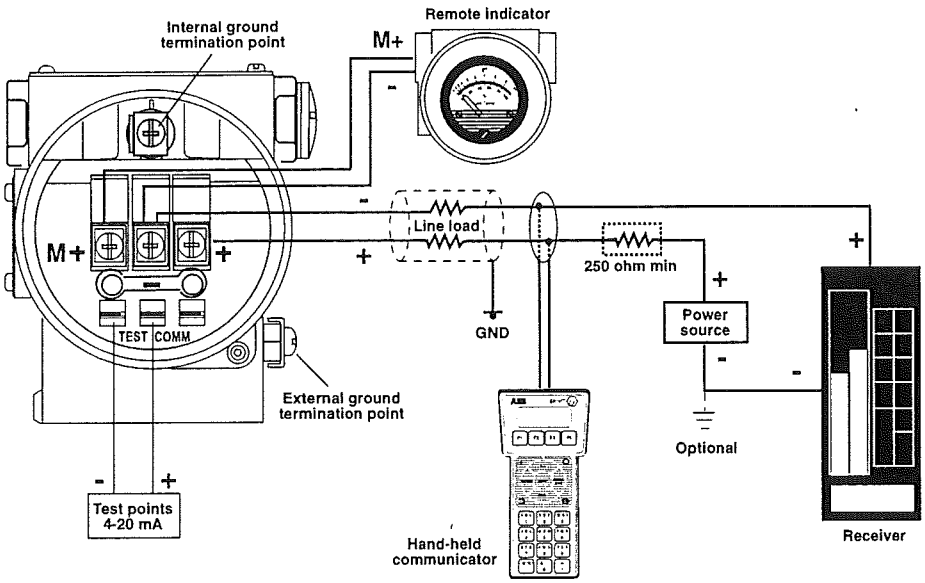

Fig. 8c - Electrical connections with remote indicator

ELECTRICAL REQUIREMENTS

The transmitter operates on a minimum voltage of 10.5 Vdc to a maximum of 42 Vdc and is protected against polarity inversion.

Note - The transmitter operates from 10.5 to 42 Vdc with no load (additional load allows operation over 42 Vdc). For EEx ia and intrinsically safe (FM, CSA and SAA) approval power supply must not exceed 30 Vdc.In some countries the maximum power supply voltage is limited to a lower value.

Installing optional devices the minimum voltage increases to:
- 10.5 Vdc with no option or with integral digital display
- 10.7 Vdc with output analog indicator
- 12.5 Vdc with LCD ProMeter
- 12.3 Vdc with surge protection
- 13.3 Vdc with LCD CoMeter
- 15.3 Vdc with no link on output indicator plug

The total loop resistance is indicated in the expression below.

$$R\ (k\Omega) = \frac{\text{Supply voltage - min. operating voltage (Vdc)}}{22.5}$$

The total loop resistance is the sum of the resistance of all elements of the loop, including wiring, conditioning resistor, safety barriers and additional indicators (excluding the equivalent resistance of the transmitter).

Where a configuration device (HART), such as the Hand Held Communicator or a Modem is likely to be used, a resistance of 250 ohm minimum should be present between the power supply and the point of insertion of these devices, to allow communication.

Several types of safety barriers, either passive or active, can be satisfactorily used in conjunction with the Smart 2600T transmitter. Nevertheless, in case of use of active barriers, check with the supplier if the model is suitable for use with smart transmitters allowing the connection of the configuration devices in the "safe" or non-hazardous area.

Note - For models 262B and 264B the frequency immunity between 150 kHz and 2 MHz with direct coupling and unshielded line is 3 V; with direct coupling and shielded line is 10 V.

WARNING - The transmitter may be used as a safety accessory (as defined by the Pressure Equipment Directive 97/23/EC) i.e. as part of a shutdown system.
In this case it is recommended to select the correct fail safe mode for the 4-20 mA signal (as per Namur NE43 recommendation).
See also the instructions relevant to fail safe selection (Up/Down scale mode) in the addendum to the instruction manual on "Use of hardware links on the secondary electronics" .

RANGE AND SPAN CONSIDERATION

The 2600T Transmitter Specification Sheets provide all information concerning the Range and Span limits in relation to the model and the sensor code.

The terminology currently used to define the various parameters is as follows:

URL : Upper Range Limit of a specific sensor. The highest value of the measured value that the transmitter can be adjusted to measure.

LRL : Lower Range Limit of a specific sensor. The lowest value of the measured value that the transmitter can be adjusted to measure.

URV : Upper Range Value. The highest value of the measured value to which the transmitter is calibrated.

LRV : Lower Range Value. The lowest value of the measured value to which the transmitter is calibrated.

SPAN : The algebric difference between the Upper and Lower Range Values. The minimum span is the minimum value that can be used without degradation of the specified performance.

TURN DOWN RATIO : is the ratio between the maximum span and the calibrated span.

The transmitter can be calibrated with any range between the LRL and the URL with the following limitations:

$$LRL \leq LRV \leq (URL - CAL\ SPAN)$$
$$CAL\ SPAN \geq MIN\ SPAN$$
$$URV \leq URL$$

CALIBRATION

Unlike conventional electronic transmitters, the use of a microprocessor and the presence of serial communications between the transmitter and the configuration device, allows the use of several different approaches in calibration and servicing. Different methods can be used to calibrate the Smart transmitter:

i) **using the local keys in the transmitter secondary unit.**
ii) **using zero/span raise/lower on transmitter electronics links.**
iii) **using the Hand Held Communicator.**
iv) **using the Personal Computer Configuration Software Package.**

This chapter describes the first method; the others are described next or in the relevant Instruction Manuals of configuration tools.
In the addendum (use of hardware links on the secondary electronics) there is an explanation of the raise/lower operation for ZERO and SPAN. It is also possible to apply a scaling to the reading of the transmitter.
The operation is called PV-scaling and is used to align the "zero" of the process with the "zero" reading of the transmitter. See the description in the Addendum for PV scaling operation.

Note: Unless otherwise specified the instrument is factory calibrated at maximum span with the LRV set to true zero. Instruments adjusted and tagged for a specific range will not require recalibration. **Rezeroing of the transmitter may be required in order to compensate for zero shift arising from the installation.**

Preliminary operation

Before commencing calibration ensure that:
i) the required span, the upper and lower range value (URV & LRV) are within the span and range limits (URL & LRL) indicated on the nameplate (please refer to "Range and Span" consideration on the previous page).
ii) the transmitter is properly powered and the electrical connections correctly made.
iii) the write protect link, located on the electronics module is in position OFF (write allowed). Access to the link is gained by unscrewing the secondary unit housing cover at the opposite end to the terminal cover (See Fig. 9).
iv) the Upscale/Downscale link is positioned to the required function: ON for Downscale OFF for Upscale (see Fig. 9).
v) make the electrical connections, as indicated in Fig. 10. Connect a precision milliammeter as shown and **remove the short circuit link.**

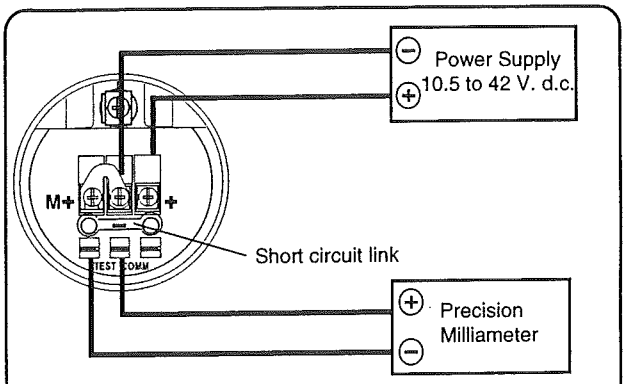

Fig. 10 - Calibration electrical connections

Set up an appropriate test rig in accordance with the required calibration. Figure 11 shows a complete test rig that can be selectively used to suit the calibration.

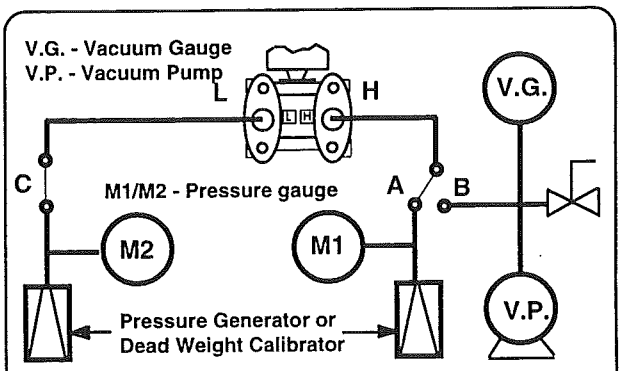

Fig. 11 - Calibration pressure connections

Note that calibration accuracy is strictly related to the accuracy of the test equipment: the use of a dead weight tester is highly recommended.

The local adjustment keys are located behind the Nameplate. To gain access slacken the nameplate screw and rotate 90°; proceed in the reverse mode when the calibration procedure has been completed. Fig. 12 shows the keys: they provide two large plastic heads that can be pushed, with spring return to normal. The local adjustment can be removed after the calibration, to avoid improper use by inserting a screwdriver blade below the plastic flange and pulling out.

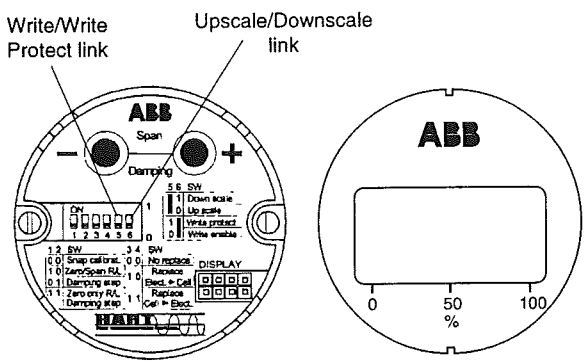

Fig. 9 Location of the links on the electronics and the integral digital display

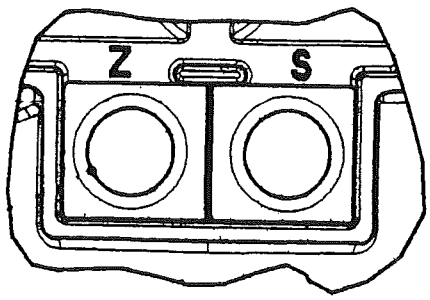

Fig. 12 - Top view of the local adjustment keys

Zero and span - true zero procedure
Differential pressure,gauge and level.

- Switch on the power supply.

- With no pressure applied to the transmitters, the value read on the digital milliammeter should be 4 mA ; if it is not 4 mA press the zero screw for at least 1 second. After this operation the reading should move to 4 mA: if no change occurs repeat the operation.

- Apply to the H (high) connection a pressure equal to the upper range value (URV) and allow time for the pressure to stabilize.

- Press the span screw for at least 1 second: after this operation the reading on digital milliammeter should be 20 mA and the calibration procedure is complete. If no change occurs either the calibration procedure was not correctly performed or the span exceeds the limit; correct and repeat the operation.

Absolute pressure

- Switch on the power supply.

- Connect a vacuum source to the process connection and draw the maximum possible vacuum obtainable. The value read on the digital milliammeter should be 4 mA ; if it is not press the zero screw for at least 1 second. After this operation the reading should move to 4 mA : if no change occurs repeat the operation.

- If the value of the calibration span (URV) is less than the atmospheric pressure gently open the vent valve so increasing the pressure to the Upper Range Value. If the calibration span (URV) is greater than the atmospheric pressure then connect the pressure connection to a pressure source and generate a pressure corresponding to the URV. Allow time for the pressure to stabilize.

- Press the span screw for at least 1 second: after this operation the reading on digital milliammeter should be 20 mA and the calibration procedure is complete. If no change occurs the calibration procedure was not correctly performed or the span exceeds the limit; apply the correction and repeat the operation.

Zero suppression procedure
Differential pressure,gauge and level.

Two different methods (a) or (b) can be used :

a) After completion of the zero and span procedure above, apply to the H (high) connection a pressure equal to the pressure to be suppressed. Allow time for pressure stabilization and then press the zero screw for at least 1 second. After this operation the digital milliammeter reading should be 4mA and the Upper Range Value automatically moved to a value equal to the sum of the pressure to be suppressed and the previous calibrated span.

b) Use the zero and span procedure above but apply pressures equal to the Lower Range Value (LRV) and then to Upper Range Value (URV), and pressing, for at least 1 second, the zero and span screws respectively.

Absolute pressure

Use the zero and span procedure as previously described, but apply to the process connection absolute pressures equal to the Lower Range Value (LRV) and then to the Upper Range Value (URV), pressing, for at least 1 second, the zero and span screws respectively.

Zero elevation procedure
Differential pressure and level

Two different methods (a) or (b) can be used :

a) After completion of the zero and span procedure above apply to the L (low) connection a pressure equal to the pressure to be elevated. Allow time for pressure stabilization and then press the zero screw for at least 1 second. After this operation the digital milliammeter reading should be 4mA and the Upper Range Value (URV) is automatically moved to a value equal to the sum of the pressure to be elevated and the previous calibrated span.

b) Use the zero and span procedure above but apply pressures equal to the Lower Range Value (LRV) and then equal to the Upper Range Value (URV) and pressing, for at least 1 second, the zero and span screws respectively. The LRV pressure will be applied to the L connection whereas the URV will be applied to the L or to the H connection depending upon the whether the range is all negative or crosses zero.

Gauge pressure

Apply to the process connection, pressures equal to the LRV and then equal to the upper range value (URV) and correspondingly press the zero and span screws respectively.

> ✳ **Note**- To prevent unauthorized calibration operation refit the write protection link in position ON (Write Protect) (Fig. 9).

> ✳ **Note** - If during the calibration procedure the readings on the digital milliammeter are outside its inherent accuracy, output trimming of the transmitter may be requested. This operation can only be performed using the Hand Held Terminal Communicator or the Personal Computer Configurator. If this equipment is not available the transmitter should be returned to a Service Center for recalibration.

In some cases, expecially for tank level measurement, the calibration can also be obtained automatically by the indication of the actual output percentage, without any calculation for LRV and URV. The operation is called Output % Reranging and can be performed using a HART configuration tool (see Output % Reranging in the ADDENDUM FOR FLANGE-MOUNTED TRANSMITTER).

DISMANTLING AND REASSEMBLY

FOR MODELS 262DS/PS/VS and 264DS/PS/VS (Fig. 13a)

WARNING - Process fluids and/or pressure retained in the transmitter primary unit can cause severe injury and death or damage to the equipment. It is the user responsibility to make sure that no pressure is applied before removing the instrument from service or when draining or venting.

Dangerous fluids

In case of toxic or otherwise dangerous process fluid, take any precautions as recommended in the relevant Material Safety Data Sheet.

CAUTION - Dismantling and reassembly should not be carried out on site because of the risk of damage to components and printed circuits as a result of adverse environmental conditions such as humidity,dust,etc. The dismantling and reassembly procedures given below should be carried out in the listed order to avoid instrument damage.

Required tools

2 mm Allen key
3 mm Allen key
Small Phillips screwdriver
Small flat-bladed screwdriver
17 mm spanner
17 mm torque wrench - (Range > 52 Nm - 39 foot lbs)

Dismantling

a) Screw down completely the cover locking screw, electronics side, using the 3 mm Allen key
b) Unscrew and remove the covers
c) Unscrew the two fixing screws and remove the secondary electronic assembly
d) Unplug the sensor cable
e) Remove the tang grub screw using the 2 mm Allen key
f) Unscrew the housing taking care not to damage the sensor cable or the connector
g) Loosen and remove the four flange fixing bolts using a 17 mm. spanner.

Reassembly

Check that the "O" rings are not damaged: otherwise replace.

WARNING - Assembling flanges with incorrect fixing bolts and nuts and improper "O rings" can cause fracture or overstressing of bolts and release of pressurized process material. Use only official spare parts (*) included in the supplementary documentation, follow the reassembly procedure herebelow described and do not exceed the specified torque limits. DO NOT REMOVE the "O ring" fitted in the sensor neck: it provides the housing a degree of protection.

a) Refit the flange fixing bolts with a torque of 20 Nm (15 ft lbs) using a 17 mm. torque wrench (52 Nm - 39 ft lbs)
Note: 1 Nm is equivalent to 0.738 ft lbs (8.85 in lbs)
b) Insert the sensor cable in its recess at the bottom of the housing.
c) Screw the housing down completely until the nesting of housing/sensor assy is reached, then unscrew by one complete turn maximum. Rotate the topwork in the desired position and lock it with the tang grub screw previously removed.
d) Plug the sensor cable to the secondary electronics. Fix the electronic circuit by its screws.
e) Refit the covers and tighten securely.

WARNING - For Hazardous Location installations, at least eight (8) threads on the cover must be engaged in order to meet the flameproof (explosion-proof) requirements.

f) Unscrew the cover locking screw to secure the covers. This is **mandatory** to meet **"Flameproof requirements" for Hazardous Areas installation.**

PRESSURE TEST WARNING

Once reassembled the process flanges and the transducer, a pressure test is required. At this purpose, apply a hydrostatic pressure of the maximum overrange pressure rating to both process connections simultaneously. Wait for one minute, then verify that no leakages occurred, otherwise repeat the assembly procedure and the pressure test.

(*) The spare parts list is available at: www.abb.com
- searching for: SL262_4D.pdf
or from local ABB representatives.

FOR MODEL 264BS (Fig. 13b)

WARNING - Process fluids and/or pressure retained in the transmitter primary unit can cause severe injury and death or damage to the equipment. It is the user responsibility to make sure that no pressure is applied before removing the instrument from service or when draining or venting.
Dangerous fluids
In case of toxic or otherwise dangerous process fluid, take any precautions as recommended in the relevant Material Safety Data Sheet.

CAUTION - Dismantling and reassembly should not be carried out on site because of the risk of damage to components and printed circuits as a result of adverse environmental conditions such as humidity,dust,etc. The dismantling and reassembly procedures given below should be carried out in the listed order to avoid instrument damage.

Required tools

2 mm Allen key
3 mm Allen key
Small Phillips screwdriver
Small flat-bladed screwdriver
17 mm spanner
17 mm torque wrench - (Range > 52 Nm - 39 foot lbs)

Dismantling

a) Screw down completely the cover locking screw, electronics side, using the 3 mm Allen key
b) Unscrew and remove the covers
c) Unscrew the two fixing screws and remove the secondary electronic assembly
d) Unplug the sensor cable
e) Remove the tang grub screw using the 2 mm Allen key
f) Unscrew the housing taking care not to damage the sensor cable or the connector.

Dismantling the process flanges

If remote seals are fitted do not dismantle the flanges!

1. Unscrew the process flange screws diagonally opposite each other (13mm Allen key for hexagon screw).
2. Carefully remove the flanges so as not to damage the isolating diaphragms.
3. Using a soft brush and a suitable solvent thoroughly clean the isolating diaphragms and, if necessary, the process flanges. Do not use sharp or pointed tools.

Reassembly

Check that the "O" rings are not damaged: otherwise replace.

WARNING - Assembling flanges with incorrect fixing bolts and nuts and improper "O rings" can cause fracture or overstressing of bolts and release of pressurized process material. Use only official spare parts (*) included in the supplementary documentation, follow the reassembly procedure herebelow described and do not exceed the specified torque limits. DO NOT REMOVE the "O ring" fitted in the sensor neck: it provides the housing a degree of protection.

a) Renew the process flange O-rings.
(Spare Parts Data Sheet 15-9.01 EN).
b) Fit the process flanges onto the measuring cell. Take care not to damage the isolating diaphragms.
Note: The flange faces of the 2 process flanges must be in one plane and at right angles to the electronic enclosure.
c) Check that the process flange screw thread moves easily: Tighten the nut by hand as far as the screw head.
If this is not possible, use new screws and nuts (Spare Parts Data Sheet 15-9.01 EN).
d) Lubricate the screw threads and contact faces of the screwed joint with, for instance "Anti-Seize AS 040 P" (Supplier: P.W. Weidling & Sohn GmbH & Co. KG, An der Kleimannbrücke 49, D 48157 Münster).
With cleanliness stages, the corresponding regulations must be observed, e.g. DIN 25410!
e) Firstly tighten the diagonally opposite flange screws or nuts to the initial torque specified in the table 3 below using a torque wrench.

Process flange-O-ring material	Initial torque	Tightening angle
Perbunan Viton EPDM	10 Nm	180° devided into two steps of 90°

Table 3: Initial torque / Tightening angle

Then tighten fully by continuing to turn each diagonally opposite screw or nut gradually, as specified in the table 3, through the specified tightening angle.
f) Check for leaks. Apply pressure with max. 1.3 x SWP for the model 262/264 BS where the pressure has to be applied simultaneously to both sides of the sensor.
g) Insert the sensor cable in its recess at the bottom of the housing.
h) Screw the housing down completely until the nesting of housing/sensor assy is reached, then unscrew by one complete turn maximum. Rotate the topwork in the desired position and lock it with the tang grub screw previously removed.
i) Plug the sensor cable to the secondary electronics. Fix the electronic circuit by its screws.
j) Refit the covers and tighten securely.

WARNING - For Hazardous Location installations, at least eight (8) threads on the cover must be engaged in order to meet the flameproof (explosion-proof) requirements.

k) Unscrew the cover locking screw to secure the covers. This is **mandatory** to meet **"Flameproof requirements" for Hazardous Areas installation.**

PRESSURE TEST WARNING
Once reassembled the process flanges and the transducer, a pressure test is required. At this purpose, apply a hydrostatic pressure of the maximum overrange pressure rating to both process connections simultaneously. Wait for one minute, then verify that no leakages occurred, otherwise repeat the assembly procedure and the pressure test.

(*) The spare parts list is available at: www.abb.com
- searching for: SL262_4D.pdf
or from local ABB representatives.

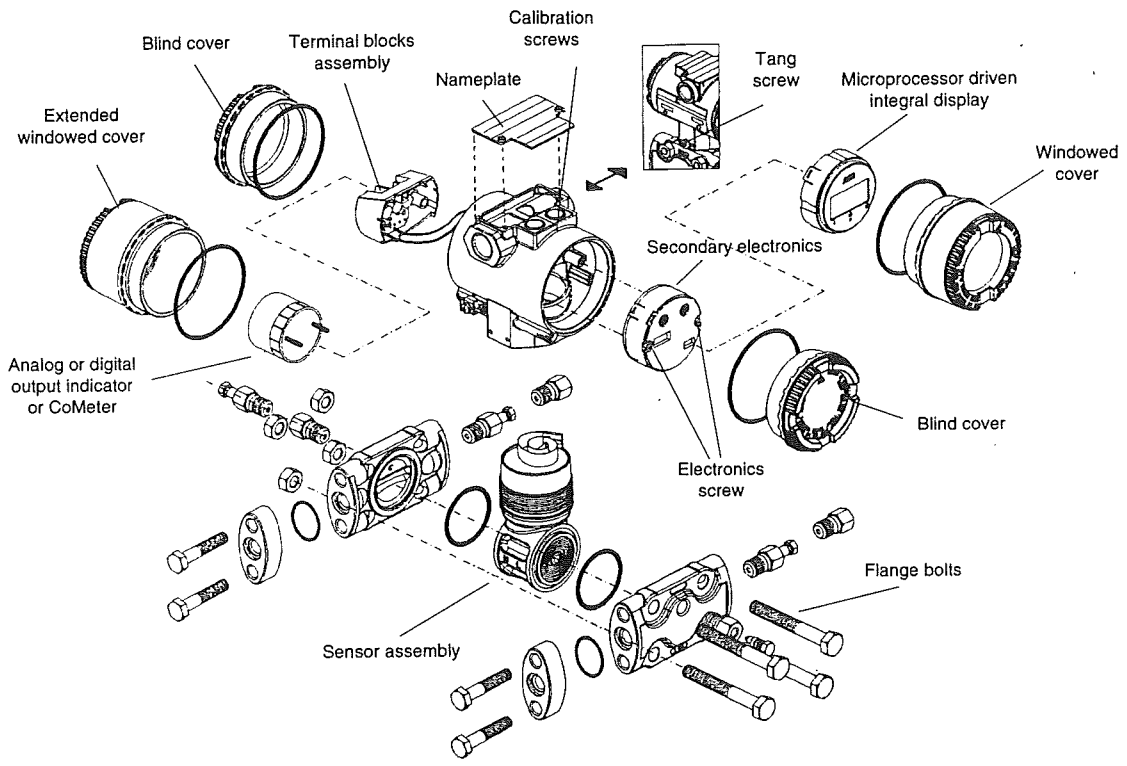

Fig. 13a - Transmitter Sectional View for models 262DS/PS/VS and 264DS/PS/VS

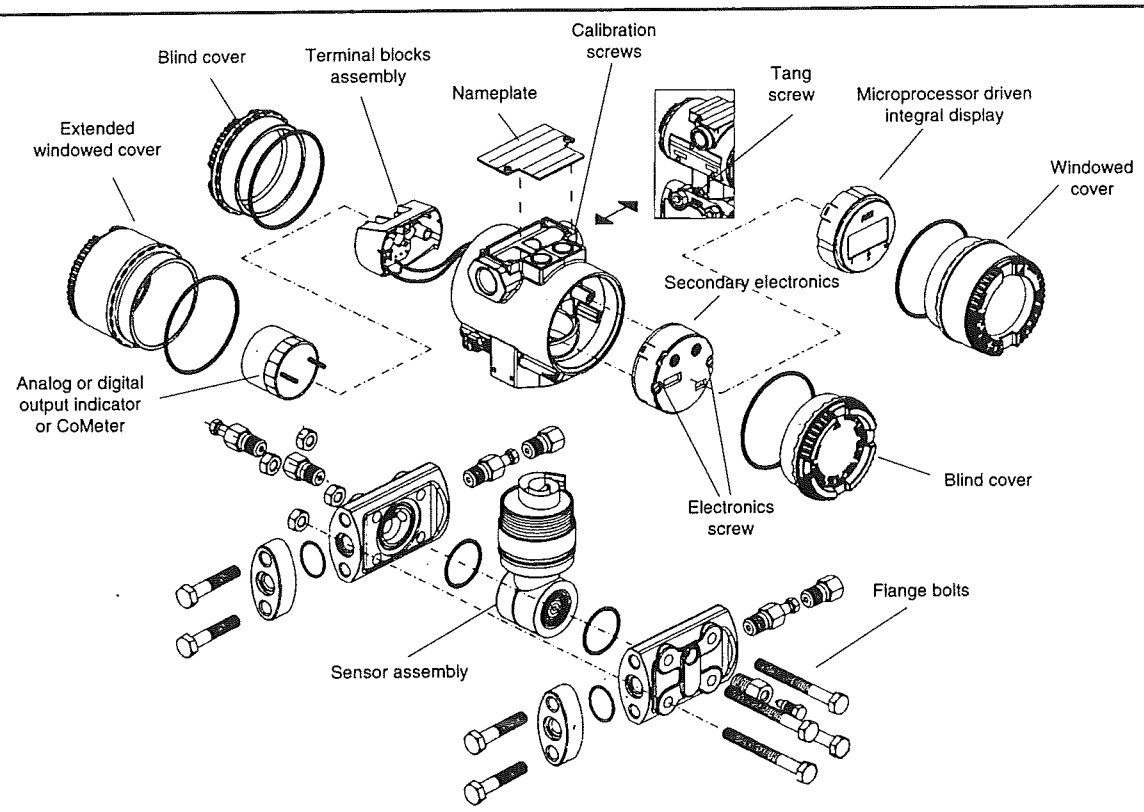

Fig. 13b - Transmitter Sectional View for model 264BS

SIMPLE FAULT FINDING (HART)

This part is applicable only for a quick fault finding in the case that the Hand Held Terminal or the P.C. Configurator Package are not available.
If the transmitter does not appear to be working satisfactory, carry out the following fault finding checks before contacting your nearest Service Centre.
If the instrument is to be returned for repair, ensure that it is adequately packed using the original polystyrene box or high density chip foam: **the trouble sheet/returning form should be sent with the instrument, filled in all its parts.** If the transmitter needs to be dismantled follow the procedures of the previous section.

WARNING : If the transmitter forms part of a control loop, the plant must be placed under local manual control while the instrument is examined or taken out of service. Take all precautions to avoid damages caused by pressure or dangerous fluids release.

Equipment needed
Voltmeter , milliammeter (0 to 100 mA d.c.), solvent contact cleaner.

High, Low or Irregular Output

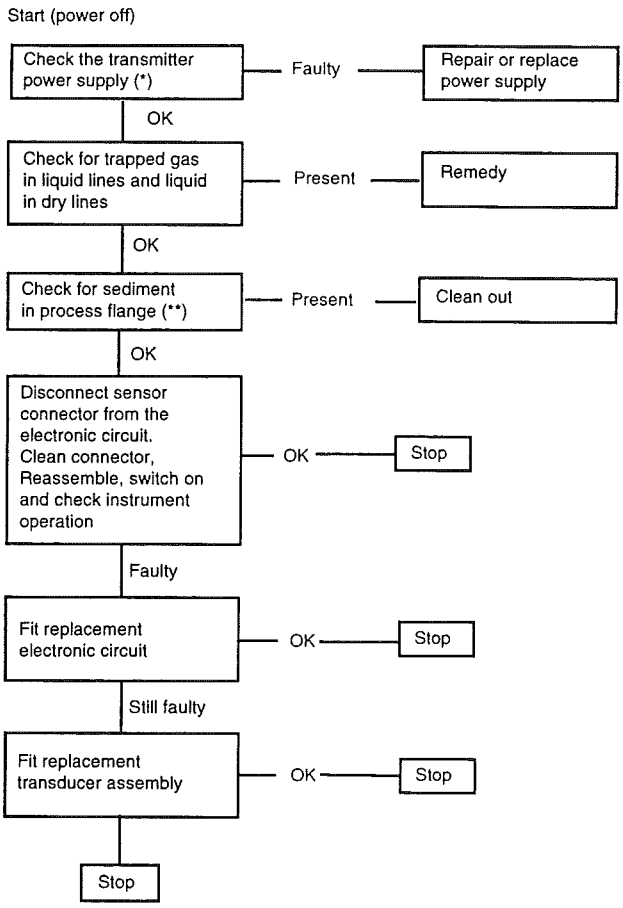

No output

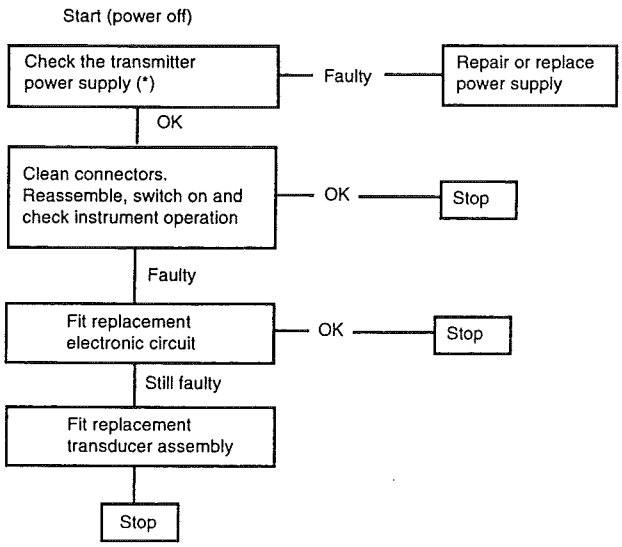

WARNING - If the transmitter needs to be repaired, the faulty unit/assembly must be replaced by an equivalent unit/assembly.

(*) If the source of the problem is suspected to be the power supply, check it by disconnecting the wires from the transmitter and testing the volts available at the wires.
(**) If there are sediments in process flanges they must be cleaned, if inevitable flanges have to be removed. Before reassembly pay attention to the O-ring: Teflon O-ring probably requires to be substituted. Refer to dismantling and reassembly section for these operations.

ABB

TROUBLE SHEET

WARRANTY REPAIR ☐ ☐ REPAIR ORDER

Rejection or discrepancy reports — Copy attached ☐ Not available ☐

- IDENTIFICATION

Customer
Purchase order No.
Plant
Name of person to contact
Instrument tag No.
Model
Serial No.

- OPERATING CONDITIONS

Specify location, environmental conditions, type of service and approximate number of operating hours or date of installation if known.

- REASON FOR RETURN

- DANGEROUS FLUIDS

In case of toxic or otherwise dangerous process fluid, please attach the relevant Material Safety Data Sheet.

Trouble found during : Installation ☐ Commissioning ☐ Maintenance ☐ At start up ☐ On service ☐

Shipping information for the return of the equipment

Material returned for factory repair, should be sent to the nearest ABB Service Center, transportation charges prepaid by the Purchaser.

Please enclose this sheet duly completed to cover letter and packing list

Date	Signature	Originator

Data Sheet

10/11-8.64 EN

Field mounted Temperature Transmitter TH202/TH202-Ex

HART programmable,
Pt 100 (RTD), thermocouples,
electrical isolation

- **Input**
  - Resistance thermometer (2, 3, 4 wire circuit)
  - Thermocouples
  - Resistance remote signalling unit (0...5000 Ω)
  - Voltages, mV (–125...+1200 mV)
- **Output**
  - 2 wire technique
  - 4...20 mA, HART signal
- **Electrical isolation (I/O)**
- **Measured error 0.1 K**
- **Customer-specific linearization**
  - 32 tie points
- **Continuous sensor and self-monitoring**
  - Parameter saved permanently in EEPROM
  - Monitoring of data integrety every 10 s
  - Wire break monitoring in acc. with NAMUR NE 89
- **Substitution strategy in case of error (NE 43)**
- **Approvals for explosion protection**
  - Intrinsically safe
    Ⓔx II 2 (1) G EEx [ia] ib IIC T6, mount in zone 1
    Ⓔx II 3 G EEx n A II T6, mount in zone 2
  - Pressure-proof
    Ⓔx II 2 G EEx d IIC T6, mount in zone 1
- **Input functionality (absolute, differential, average value)**
- **EMC acc. to EN 50082-2 and NE 21**
- **Parameterization**
  - Device Management Tool: SV4xx (SMART VISION)
  - Hand held terminals:
    DHH691 (691 HT), STT04, HC275, FC375
  - CoMeter (HART configurator/LC display)

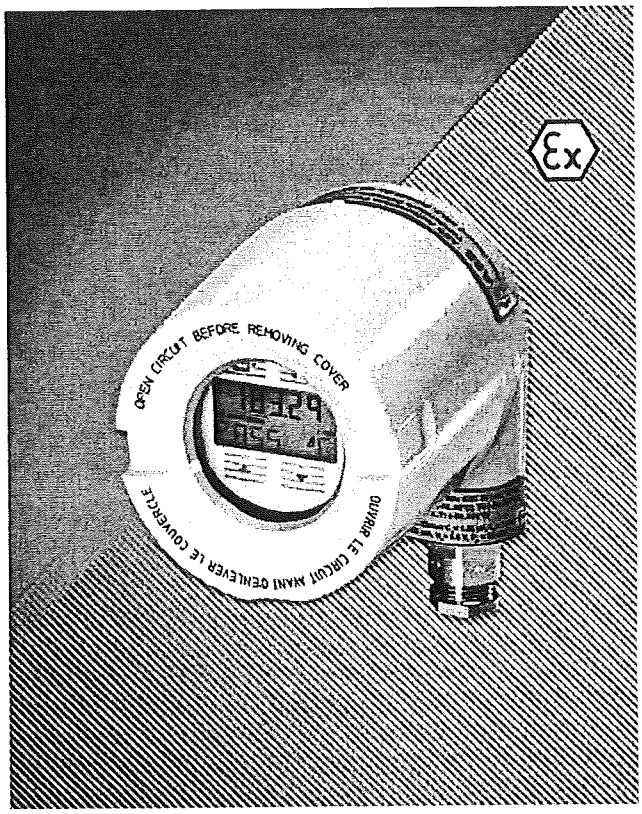

HART FIELD COMMUNICATIONS PROTOCOL

Excellent long term stability
Temperature linear output signal
Enhanced self diagnostics

ABB

Technical data

Output

Output signal (temperature linear)
4...20 mA

Residual ripple (peak-to-peak)
< 0.3 %

Current consumption
< 3.6 mA

Maximum output current
23.6 mA

Parameterizable current error signal

Underranging/underranging value	3.6...4 mA
Overranging/overranging value	20...23.6 mA
Default value (acc. to NE43)	3.6 or > 21 mA

Damping
t_{63} = 0...30 s

Input

Resistance

Resistance thermometer (IEC 751, JIS, SAMA)
n · Pt 100/Ni 100 to Pt 1000/Ni 1000; Cu
(n = 0.1, 0.2, 0.5, 1, 1.2, 2, 3...10)
Min. measuring span 15 K/50 K

Resistance
0...500 Ω/0...5000 Ω
Min. measuring span 5 Ω/50 Ω

Maximum line resistance (R_W) per core
2, 3, 4 wire 7.5 Ω, 10 Ω, 50 Ω

Measuring current
300 µA

Sensor short-circuit
< 5 Ω (for RTD)

Sensor break (temperature/resistance measurement 2, 3, 4 wire)

Measuring range 0... 500 Ω	> 530 Ω
Measuring range 0...5000 Ω	> 5.3 kΩ

Sensor wire break monitoring in accordance with NAMUR NE 89
Sensor wire break detection

3 wire resistance measurement	> 35 Ω
4 wire resistance measurement	> 3.7 kΩ

Input filter
50/60 Hz

Thermocouples

Types
B, E, J, K, L, N, R, S, T, U

Voltages
-125 mV...+ 125 mV
-125 mV...+1200 mV

Minimum measuring span
2 mV/50 mV

Sensor wire break monitoring in accordance with NAMUR NE 89
Pulsed with 1 µA outside of the measuring interval
Monitoring disconnectible

Thermocouple measurement	> 5 kΩ
Voltage measurement	> 5 kΩ

Input filter
50/60 Hz

Internal reference junction
Pt 100, via software switchable (no jumper necessary)

Input element		Measuring range	Min. measuring span
Standard	Sensor		
IEC 584-1	Thermocouple type B	250...+1820 °C (+482...+3308 °F)	235 °C (423 °F)
	Thermocouple type E	–250...+1000 °C (–418...+1832 °F)	30 °C (54 °F)
	Thermocouple type J	–210...+1200 °C (–346...+2192 °F)	37 °C (67 °F)
	Thermocouple type K	–250...+1372 °C (–418...+2502 °F)	54 °C (98 °F)
	Thermocouple type R	– 50...+1768 °C (– 58...+3215 °F)	171 °C (308 °F)
	Thermocouple type S	– 50...+1768 °C (– 58...+3215 °F)	193 °C (348 °F)
	Thermocouple type T	–200...+ 400 °C (–328...+ 752 °F)	50 °C (90 °F)
	Thermocouple type N	–200...+1350 °C (–328...+2462 °F)	60 °C (108 °F)
DIN 43710	Thermocouple type L	–200...+ 900 °C (– 76...+ 482 °F)	36 °C (65 °F)
	Thermocouple type U	–200...+ 600 °C (–328...+1112 °F)	40 °C (72 °F)
IEC 751; JIS; SAMA[1)] 2, 3 and 4 wire	Resistance thermometer Pt 100	–200...+ 850 °C (–328...+1562 °F)	15 °C (28 °F)
	Resistance thermometer Pt 1000	–200...+ 850 °C (–328...+1562 °F)	50 °C (90 °F)
DIN 43760 2, 3 and 4 wire	Resistance thermometer Ni 100	– 60...+ 250 °C (– 76...+ 482 °F)	8 °C (15 °F)
	Resistance thermometer Ni 500	– 60...+ 250 °C (– 76...+ 482 °F)	15 °C (28 °F)
Resistance	Ω	0...500 Ω/0...5000 Ω	5 Ω/50 Ω
Voltage	mV	–125 mV...+ 125 mV –125 mV...+1200 mV	2 mV 50 mV

[1)] IEC 751 a = 0.00385, JIS a = 0.003916, SAMA a = 0.003902

Power supply (poling protected)

Supply voltage

Non-Ex-application	U_s = 8.5...30 V DC
For Ex-Application, max.	U_i = 8.5...29.4 V DC

2 wire methode: power supply wires = signal wires

Influence of supply voltage
< 0.05 %/10 V

maximum residual ripple
≤ 1 % U_S (< 500 Hz)

Power demand of indicators
(Power demand of transmitter and indicator have to be added)

Digital indicator
U_{sd} = 2 V DC

CoMeter (HART configutor/LC display)
U_{sd} = 2.9 V DC

Maximum load

$$R(k\Omega) = \frac{(U_{smax} - U_{smin})}{23.6}$$

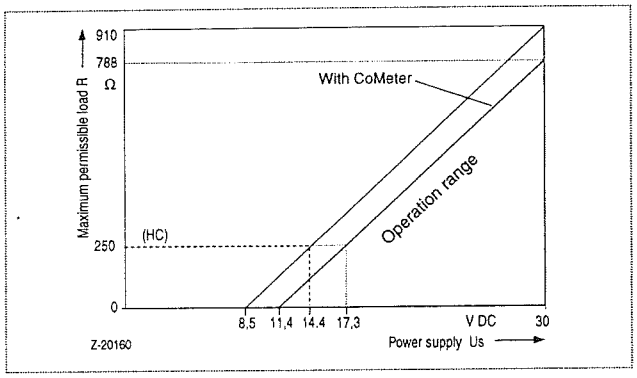

General characteristics

Output signal refreshment rate

Pt 100	0.4 s (Input signal change < 0.25 K/s)
Thermocouples	0.2 s (Input signal change < 2.5 K/s)

Vibration resistance

Vibration in operation	2g acc. to DIN IEC 68T.2-6
Resistance to shock	acc. to DIN IEC 68T.2-27

Electrical isolation (I/O)
1.5 kV AC (60 s)

Long-term drift
≤ 0.02 % per annum (ambient temperature < 60 °C)
≤ 0.05 % per annum (ambient temperature < 85 °C)

Environment conditions

Ambient temperature range
-40...85 °C

Transport and storage temperature
-40...100 °C

Relative humidity
< 100 %

Condensation: Permitted

Mechanical construction

Dimensions
Confer dimensional drawing

Weight
1.25 kg (without accesories)

Housing material

Aluminium	epoxy color (RAL 9002)
stainless steel	

Type of protection
IP 67

Electrical connection

Thread (alternatively)
2 x M20 x 1.5, 2 x 1/2" GK, 2 x 1/2" NPT, 2 x 3/4" NPT

or with cable screw connections
2 x M20 x 1.5 (metal)

Ground screw external/internal
6 mm^2 M5 / 2.5 mm^2 M4

Terminals, pluggable
2.5 mm^2, screw terminals

Characteristics at rated conditions
According to IEC 770 (related to 25 °C)[1]

Digital measured error

Pt 100	± 0.1 K
Thermocouples	± 20 µV
Linear resistance 500 Ω/5000 Ω	± 40 mΩ/200 mΩ
Linear voltage 120 mV/1200 mV	± 20 µV/50 µV

D/A measured error
± 0.05 % of measuring span

Additional influence of the internal reference junction
Pt 100 DIN IEC 751 Kl. B

Influences

Influence of ambient temperature acc. to IEC 68-2-2
Pt 100/resistance measurement[2]

$$< (0.05\,\% + \frac{ME\,(\Omega)}{MS\,(\Omega)} \times 0.008\,\%)/10\,K$$

Thermocouple/mV[3]

$$< (0.05\,\% + \frac{ME\,(mV)}{MS\,(mV)} \times 0.01\,\% + \frac{0.14\,K}{MS\,(K)} \times 100\,\%)/10\,K$$

Percentage related to measuring span MS = ME – MA
MA = lower range value, ME = upper range value

[1] Percentage related to set measuring span
Specified values corresponds to 3 σ (Gaussian normal distribution)
[2] Pt 100 (0...400 °C): Influence of ambient temperature
< (0.05 % + 0.013 %)/10 K = 0.063 %/10 K
[3] Type K (0...1000 °C): Influence of ambient temperature
< (0.05 % + 0.01 % + 0.014 %)/10 K = 0.074 %/10 K

Explosion protection

Intrinsically safe

Zone 1

Marking	Ⓔx II 2 (1) G EEx [ia] ib IIC T6
EC-Type-Examination certificate	PTB 99 ATEX 2139 X
Temperature class T6/T5/T4	50 °C/65 °C/85 °C

Supply circuit	Output [ib]	Input [ia]
Max. voltage	U_i = 29.4 V	U_o = 5.6 V
Short-circuit current	I_i = 130 mA	I_o = 1.5 mA[1)]
Max. power	P_i = 0.8 W	P_o = 20 mW
Internal inductance	L_i = 220 µH	L_o = 1 mH
Internal capacitance	C_i = 15 nF	C_o = 1.55 µF

1) See 1. supplement PTB 99 ATEX 2139 X

Zone 2

Marking	Ⓔx II 3 G EEx n A II T6
Conformity statement	PTB 99 ATEX 2216 X
Temperature class T6/T5/T4	50 °C/65 °C/85 °C

Dust-explosionproof

Zone 20: intrinsically safe type

Marking	Ⓔx II 1 D IP 65 T 135 °C and Ⓔx II 2(1) G EEx ia IIC T6
EC-Type-Examination certificate	DMT 02 ATEX E 248

Zone 20: Non intrinsically safe type

Marking	Ⓔx II 1 D IP 65 T 135 °C[2)]
EC-Type-Examination certificate	DMT 02 ATEX E 248

Pressure-proof enclosure

Marking	Ⓔx II 2 G EEx d IIC T6
EC-Type-Examination certificate	PTB ATEX 1144 X
Temperature class T6/T5/T4	50 °C/65 °C/85 °C

Canadian Standards Association and Factory Mutual

Intrinsically Safe

FM/CSA	Class I, Div. 1/Div. 2, Groups A, B, C, D Class II, Div. 1/Div. 2, Groups E, F, G Class III Class I, Zone 1, AEx [ia] ib IIC T6 Class I, Zone 1, Ex [ia] ib IIC T6

Nonincendive

FM	Class I, Div. 2, Groups A, B, C, D, T6 Class II, Div. 1/Div. 2, Groups F, G, T6 Class III T6

Explosionsproof

FM/CSA	Class I, Div. 1/Div. 2, Groups A, B, C, D, T6 Class II, Div. 1/Div. 2, Groups E, F, G, T6 Class III T6

2) With this marking, a 63 mA fuse must be inserted in the 4...20 mA circuit before the transmitter

Electromagnetic compatibility (EMC)

Pt 100: measuring range 0...100 °C, span 100 K

Type of test	Degree	Influence	IEC
Burst to signal/ data lines	3 kV	< 0.1 %	1000-4-4
Static discharge Contact plate (indirect) Terminals for supply[3)] Terminals for sensors[3)]	 8 kV 6 kV 4 kV	 no influence no influence no influence	1000-4-2
Radiated field 80 MHz...1 GHz	10 V/m	< 1.0 %	1000-4-3
Coupling 150 kHz - 80 MHz	10 V	< 1.0 %	1000-4-6

3) Air discharge (at 1 mm distance)

According to NAMUR NE 21 recommendation.

In case of an input signal change > 0.25 K/s for Pt100 or > 2.5 K/s for thermocouples a measured value plausibility check is performed.

Communication/parameterization

Hand held terminal HHT
DHH691 (691 HT), STT04, HC275, FC375

CoMeter
Hart conigurator and LC display

Device Management Tool
DSV4xx (SMART VISION)

FDT/DTM technology

Software connection
AMS (from version 5 without additional drivers)

Parameter
Sensor type, error signalling, measuring range, general characteristics (i. e. TAG number), damping, signal simulation of output

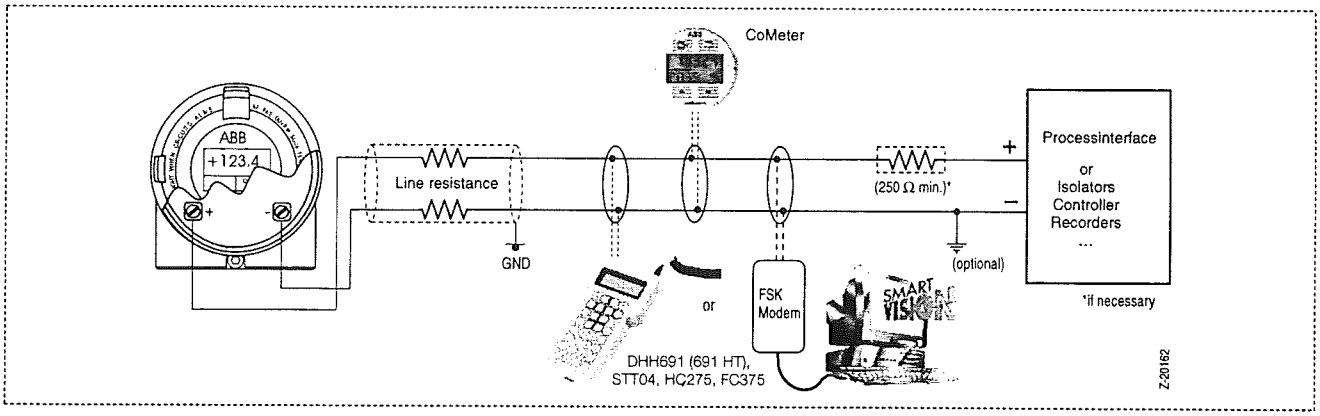

Connection diagram

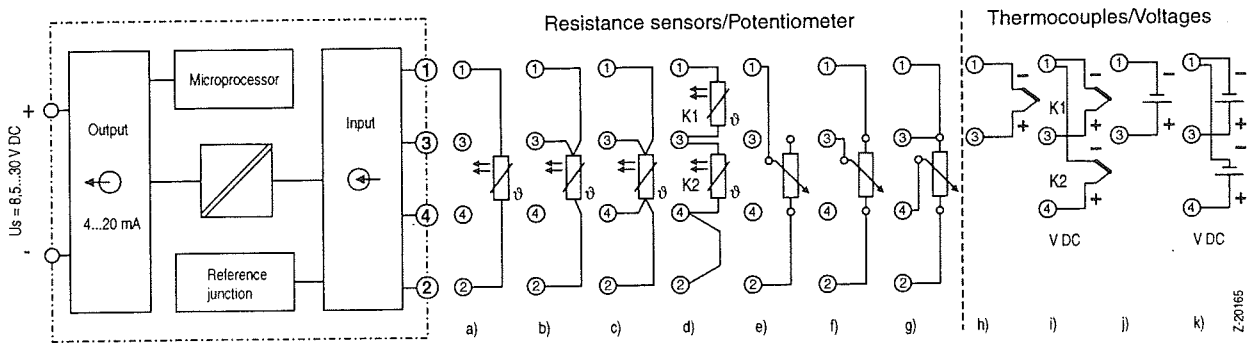

a) Resistance thermometer, 2 wire circuit
b) Resistance thermometer, 3 wire circuit
c) Resistance thermometer, 4 wire circuit
d) Double resistance thermometer, 2 wire circuit (average value or differential temperature measurement)

Potentiometer: 0...500 Ω or 0...5000 Ω
e) Potentiometer input, 2 wire circuit
f) Potentiometer input, 3 wire circuit
g) Potentiometer input, 4 wire circuit

f) Thermocouple
g) Double thermocouple (average value or differential temperature measurement)

Voltages: -125 mV...+125 mV or -125 mV...+1200 mV
h) Voltage measurement
i) 2-fold voltage measurement (average value or differential temperature measurement)

Dimensional diagram (Dimensions in mm)

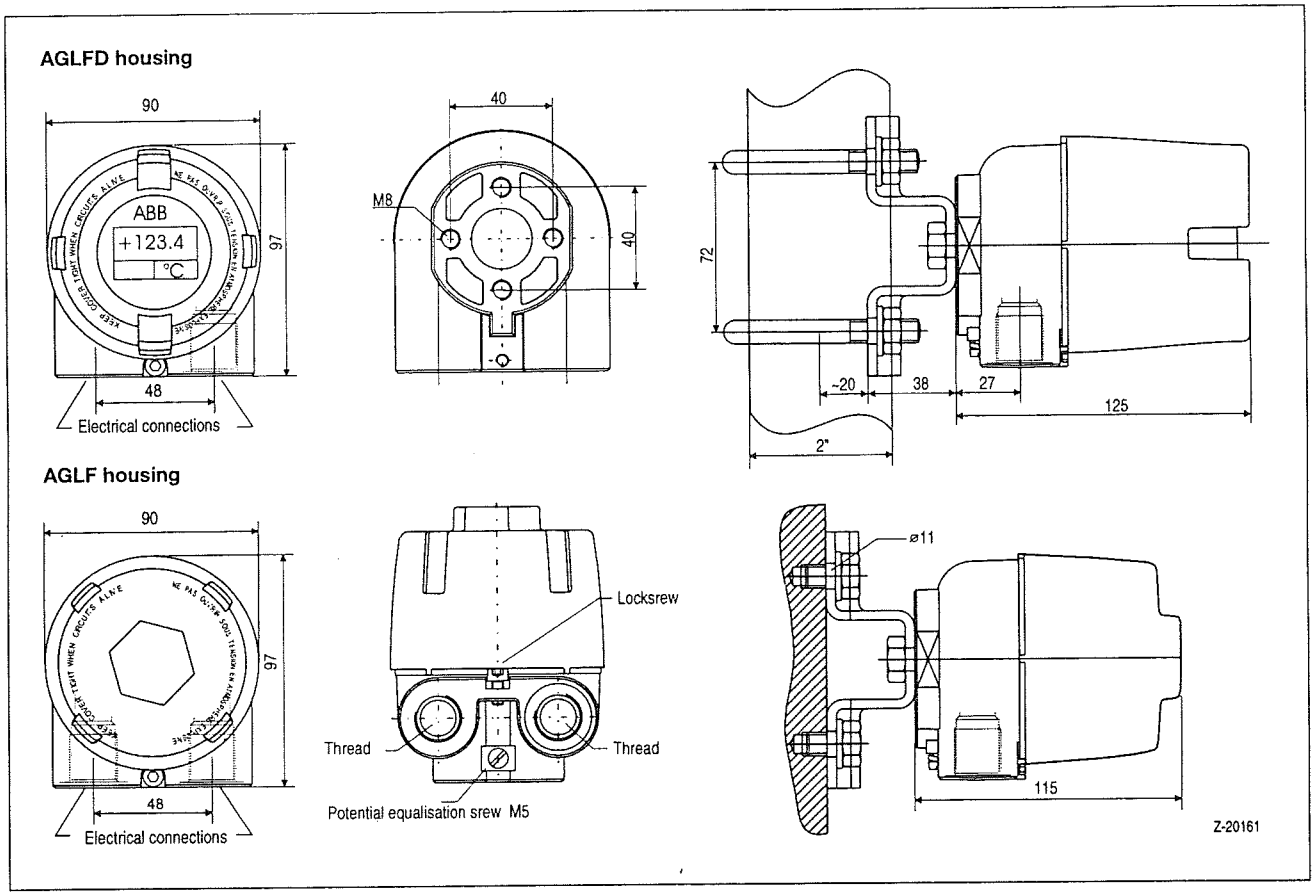

Displays (option)

ProMeter

- Programmable LC indicator
- loop-powered (4...20 mA)
- LC display: 5 digits (± 1999), digit height 7,6 mm, 7 segments
- sign and variable decimal place
- 10 segment bargraph (heading of measuring range)
- 7 digits alphanumeric characters 6 mm, 14 segments
- Programmable display variables:
  process value, sensor value, loop current, percentage
- Password-protected programming acces

CoMeter

- Dual function (HART configurator and programmable LC display)
- Programmable LC indicator as ProMeter

HART configurator

- HART transmitter programming unit (all HART functions except for freely configurable characteristic curve and TAG Number)
- Request function
  Process variable, analog and display value, description of measuring point, serial number, error behaviour, lower/upper measuring range limit
- Change function
  Sensor type, sensor circuit, measuring range, damping, mains filter, error signalling
- Special function
  Zero point adjustment, simulation of output signal, adjustment of output signal, wet calibration

Display	ProMeter	CoMeter
Response time	1.3 s	
Measuring error	± 0.15 %	
Maximum current	130 mA	215 mA
EMC	EN 50082-2	
Temperature operating range	-20...+70 °C (-40...-20 °C without function)	
Humidity	0...100 %, condensating permitted	

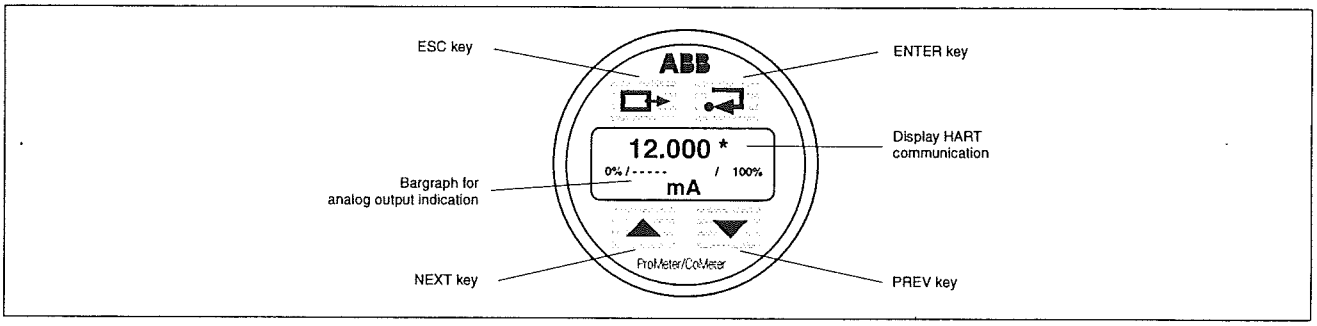

ProMeter configuration menu

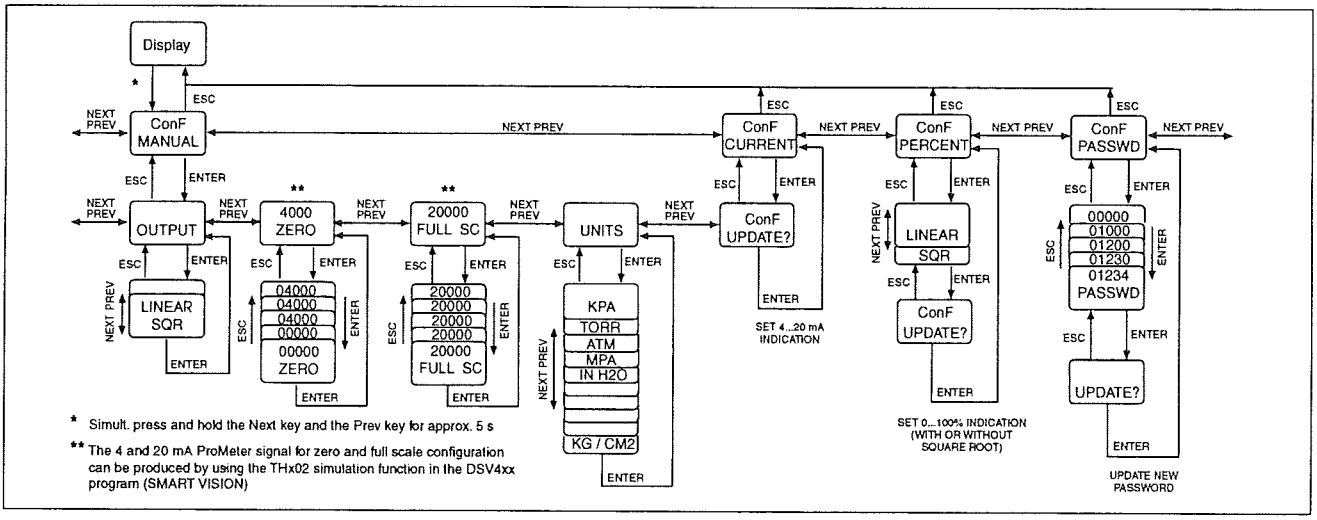

Note:

1. When using the ProMeter for process value or sensor value indication, its zero and full scale configuration must be in accordance with the transmitter temperature range or sensor range.
2. CoMeter configuration menu see 3KDE115040R4501

TH 02 / 02-Ex / 02-Ex N
TH 102 / 102-Ex / 102-Ex N
TH 202 / 202-Ex / 202-Ex N

HART-programmierbare Temperatur-Transmitter
HART programmable temperature transmitters

Gebrauchsanweisung / Manual

42/11-49 XA

Rev. 1.0

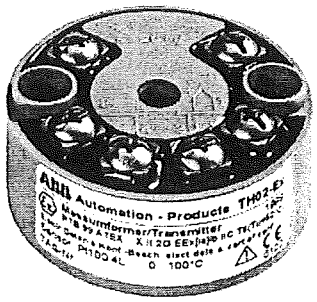

TH 02

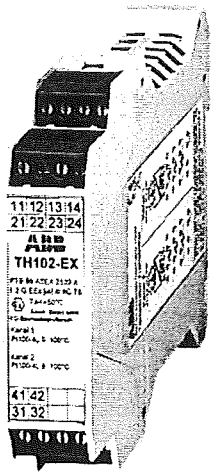

TH 102

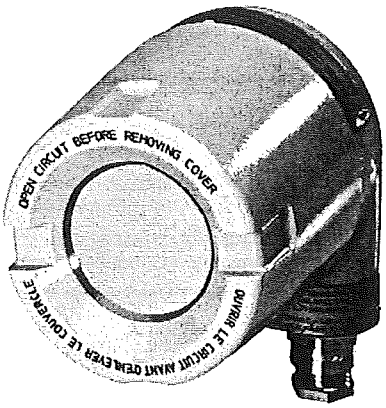

TH 202

Diese Gebrauchsanweisung muß mit dem zugehörigen Listenblatt und bei explosionsgeschützten Geräten außerdem mit der zugehörigen PTB-Bescheinigung ergänzt werden (siehe Seite 2).

This Manual may only be used with the Data Sheet for the device (see page 3) or (for explosion protected devices) with the data Sheet for the device and with the EEC Certificate of Conformity or Declaration of Conformity for the device (see page 3).

ABB

Supplementary documentation!

TH 02	Data Sheet 10/11-8.19
TH 02-Ex	Data Sheet 10/11-8.19, EEC Certificate of Conformity PTB 99 ATEX 2139 X
TH 02-Ex N	Data Sheet 10/11-8.19, Declaration of Conformity PTB 99 ATEX 2216 X
TH 102	Data Sheet 10/11-8.54
TH 102-Ex	Data Sheet 10/11-8.54, EEC Certificate of Conformity PTB 99 ATEX 2139 X
TH 102-Ex N	Data Sheet 10/11-8.54, Declaration of Conformity PTB 99 ATEX 2216 X
TH 202	Data Sheet 10/11-8.64
TH 202-Ex	Data Sheet 10/11-8.64, EEC Certificate of Conformity PTB 99 ATEX 2139 X
TH 202-Ex N	Data Sheet 10/11-8.64, Declaration of Conformity PTB 99 ATEX 2216 X

General Safety Regulations!

The unit has been constructed and tested
- in accordance with IEC 1010-1 (corresponds to EN 61 010-1 corresponds to DIN VDE 0411 Part 1 „Safety requirements for electrical process, instrumentation and laboratory units"),
- possesses CE certification and
- has left the factory in a perfect technical and safe condition.

In order to retain this condition when dealing with the unit (transportation, storage, maintenance, commissioning, operation, servicing, switch-off)
- the contents of this Operating Manual and
- the rating plates attached to the unit, inscriptions and safety instructions must be observed.

Otherwise
- persons could be endangered and
- the unit itself, as well as other equipment could be damaged.

The directives, norms and guidelines mentioned in this Operating Manual are applicable in the Federal Republic of Germany. When using the unit in other countries, please observe the national regulations prevailing in the respective country.

Should the information provided in this Operating Manual prove to be insufficient, please do not hesitate to use the address list provided on the back sheet of this manual to contact the manufacturer.

Safety instructions for all versions!

The safe separation of live currents can only be guaranteed, if the connected apparatus meets the requirements of VDE 0106 T.101 (basic standards for electrical safety). To achieve this safety, the conduits should be laid separately from the hazardous circuits, or should receive extra insulation.

Before switching on the apparatus make sure that the ambient conditions stated in the Data Sheet are met and also that the voltage of the power supply unit is identical with the voltage of the transmitter.

Whenever it can be assumed that harmless operation is no longer possible, the apparatus shouldbe be made inoperative and secured against any unintended operation.

Additional safety instructions for TH 02-Ex, TH 102-Ex and TH 202-Ex!

During all work on TH 02-Ex, TH 102-Ex or TH 202-Ex the EEC Certificate of Conformity PTB 99 ATEX 2139 X must be observed.

TH 02-Ex, TH 102-Ex and TH 202-Ex may be directly mounted in Zone 1. Because of the ex-separation due to a [ib] supply circuit, the [ia] measured current (sensor connection) is suitable.

The TH 02-Ex and TH 102-Ex should be mounted in such way that the connected parts also achieve a degree of housing protection of at least IP 20, as stipulated in the IEC publication 529 (144).

If for functional reasons the intrinsic safety circuit must be grounded because of equipontential bonding, only one point should be grounded.

If an apparatus with an intrinsically safe circuit is connected to the transmitter, proof of the intrinsic safety of the connection must be provided in accordance with DIN VDE 0165 / 08.98 (= EN 60 079-14 / 1997 and IEC 60 079-14 / 1996) respectively.

Work on an explosion-proof apparatus may be carried out in any workshop by all persons trained as electricians. Before commencing work, please ensure that safety measures regarding explosion protection have been taken!

Due to the high surface resistance of $R > 10^9\ \Omega$, operate and maintain the TH 102-Ex in such way that no dangerous electrical discharges can occur.

Additional safety instructions for TH 02-Ex N, TH 102-Ex N and TH 202-Ex N!

During all work on TH 02-Ex N, TH 102-Ex N or TH 202-Ex N the declaration of conformity PTB 99 ATEX 2216 X must be observed.

TH 02-Ex N, TH 102-Ex N and TH 202-Ex N may be directly mounted in Zone 2.

TH 02-Ex N, TH 102-Ex N and TH 202-Ex N should be mounted in such way that a degree of protection of at least IP 54 to IEC publication 529 (144) is also maintained for connected elements.

Work on the explosion-proof units may be carried out by any trained electrician and in any workshop. Before commencing work, please observe the safety regulations pertaining to explosion protection!

Declaration of Conformity

The protection regulations of the European Guidelines 94/9/EG are fulfilled.

The safety regulations of the European Guidelines 89/336/EWG together with its amendments are fulfilled because of adherence to the following norms:
- Emitted interference: EN 50 081-1:1992
- Interference immunity: EN 50 082-2:1995
- Test standards: EN 61 000-4 Part 2, 3, 4, 5 and 6.

For details of the EMC test report see the Data Sheets.

TH 202 / -Ex / -Ex N montieren

Mounting TH 02 / -Ex / -Ex N

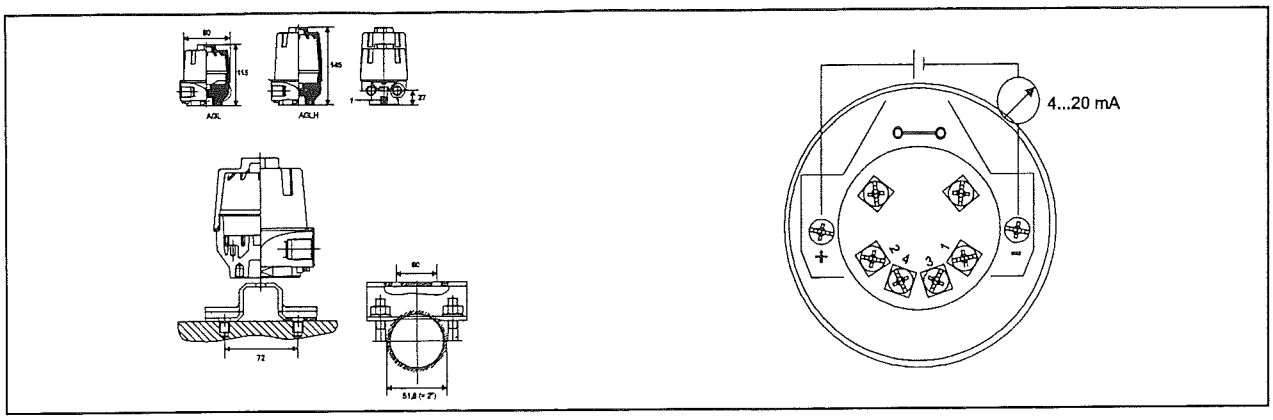

Bild 13 TH 202 / -Ex / -Ex N montieren

Z-20153 links Maßbild (Maße in mm)

oben **Gehäusetypen**

1 Erdungsschraube
bis 6 mm² Massiv-Leitung
bis 4 mm² Litze-Leitung

unten **Montagemöglichkeiten**

links Wandmontage
rechts Rohrmontage

Z-20194 rechts anschließen
+ / – Energieversorgung (und Ausgang):
TH 202, -Ex N 8,5...30 V DC
TH 202-Ex 8,5...29,4 V DC
1..4 siehe Bild 14

Fig. 13 Mounting TH 202 / -Ex / -Ex N

links Maßbild (Maße in mm)

above **Types of housing**

1 grounding screw
up to 6 mm² solid cable
up to 4 mm² stranded wire cable

below **Mounting possibilities**

left wall-mounting
right pipe-mounting

rechts Wiring
+ / – power supply (and output):
TH 202, -Ex N 8,5...30 V DC
TH 202-Ex 8,5...29,4 V DC
1..4 see fig. 14

TH 202 / -Ex / -Ex N anschließen

Bild 14 Anschlußbild

A Widerstandsthermometer 2-Leiter

B Widerstandsthermometer 3-Leiter

C Widerstandsthermometer 4-Leiter

D Doppelwiderstandsmessung 2-Leiter
Differenztemp. K1 – K2 oder Mittelwert
$K1_{max} + K2_{max} \leq 5\ k\Omega$

E Potentiometermessung 2-Leiter
$R_{poti} \leq 5\ k\Omega$

F Potentiometermessung 3-Leiter
$R_{poti} \leq 5\ k\Omega$

G Potentiometermessung 4-Leiter
$R_{poti} \leq 5\ k\Omega$

H Thermoelementmessung

I Doppelthermoelementmessung
Differenztemp. K1 – K2 oder Mittelwert

J Spannungsmessung

K Doppelspannungsmessung
Differenzspannung K1 – K2 oder Mittelwert

Differenztemperatur-Meßarten

asymmetrisch
Voraussetzung: K1 – K2 ≥ 0 K
wenn K1 – K2 = 0 K, dann I_a = 4 mA

symmetrisch
wenn K1 - K2 > 0 K, dann I_a = >12...20 mA
wenn K1 – K2 = 0 K, dann I_a = 12 mA
wenn K1 – K2 < 0 K, dann I_a = 4...<12 mA

Z-20195

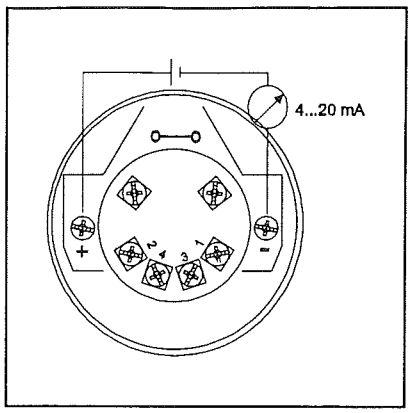

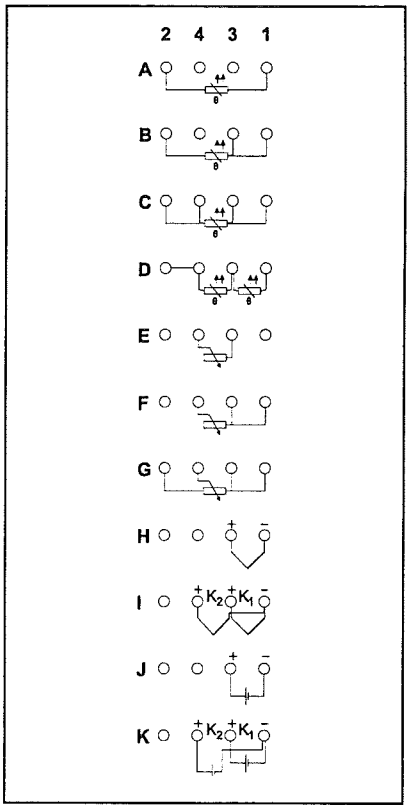

Wiring TH 202 / -Ex / -Ex N

Fig. 5 Connection diagram

A Resistance thermometer 2-wire

B Resistance thermometer 3-wire

C Resistance thermometer 4-wire

D Double resistance measurement 2-wire
Differential temp. K1 – K2 or average value
$K1_{max} + K2_{max} \leq 5\ k\Omega$

E Potentiometer measurement 2-wire
$R_{poti} \leq 5\ k\Omega$

F Potentiometer measurement 3-wire
$R_{poti} \leq 5\ k\Omega$

G Potentiometer measurement 4-wire
$R_{poti} \leq 5\ k\Omega$

H Thermocouple measurement

I Double thermocouple measurement
Differential temp. K1 – K2 or average value

J Voltage measurements

K Double voltage measurement
Differential voltage K1 – K2 or average value

Differential temperature - types of measurement

asymmetrical
precondition: K1 – K2 ≥ 0 K
if K1 – K2 = 0 K, then I_a = 4 mA

symmetrical
if K1 - K2 > 0 K, then I_a = >12...20 mA
if K1 – K2 = 0 K, then I_a = 12 mA
if K1 – K2 < 0 K, then I_a = 4...<12 mA

- Sensor- und Versorgungsleitungen werden an den Schraubklemmen des TH 202 / TH 202-Ex für Leitungsquerschnitte bis max. 1,5 mm² (mit Adernendhülsen) angeschlossen.

- Sensor and supply conduits are connected to the screw terminals of TH 202 / TH 202-Ex for pipe cross-sections of up to 1.5 mm² (with wire end ferrules).

HART communication, HART programmming (with PC or HART communicator

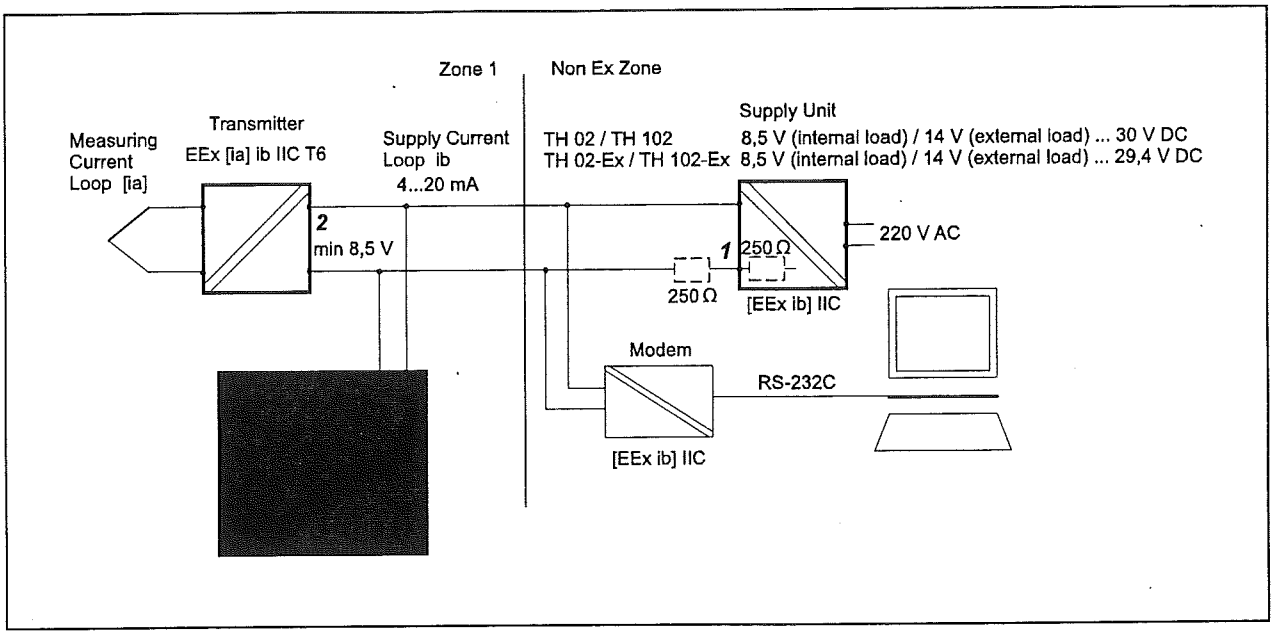

Fig. 16 HART communication including specifications for HART communication for Ex units

Z-20087 *1* Precondition for communication min. 250 Ω (max. 950 Ω) in mains unit or in the 4...20 mA current loop

2 Take account of power current drop in the 4...20 mA current loop (e.g. load 250 Ω × 22 mA = 5.5 V): in the case of I_{max} = 22 mA at least 8.5 V must be available at the transmitter terminals.

Bus operation

TH 02, TH 02-Ex, TH 102 and TH 102-Ex are suitable for multitrop and FSK bus operation.

Multitrop operation

Maximum of 15 units, addressing with address 1...15, no analog signal I = 4 mA constant per unit, only HART signal available.

FSK Bus Operation

More than 1000 units, addressing with communication names (address 0), analog and HART signal available.

Programming with PC

Software

SMART VISISON (to be ordered from manufacturer)

Hardware

Modem — FSK modem II with electrical isolation and [EEx ib] IIC (supplied by manufacturer)

Notice
As a matter of principle, use only the electrically isolated FSK modem II from manufacturer for field programming exercises.

PC — Minimum // Recommendation
- Processor 80486 DX2/66 // Pentium 100
- RAM 8 MB // 32 MB
- 2-fold CD-ROM // 4-fold CD-ROM
- free hard disk capacity 20 MByte
- Monitor and graphic card VGA // SVGA
- Windows 3.1x

Programming with HART communicator

In principle, all HART units can be programmed without having to load the unit-related „device description" stored in the HART communicator into the standard parameters (lower-range value, upper-range value, unit, damping, tag name) defined by the HART User Group.

Precondition for programming **all** functionalities of a unit is the loading of the unit-related „device description" into the HART communicator.

Gemeinsame Speisung mehrerer Geräte

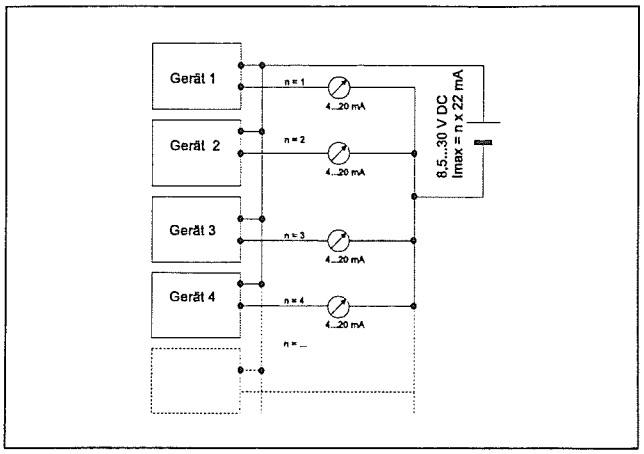

Bild 15 Gemeinsame Speisung: mehrere TH 02 / TH 102 (einkanalig) / TH 202

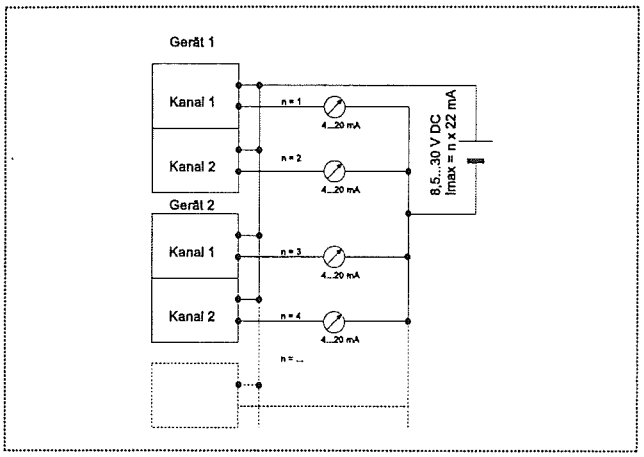

Bild 16 Gemeinsame Speisung: mehrere TH 102 (zweikanalig)

Imax = n x 22 mA. Die Spannung an den Klemmen der Geräte muß bei maximalem Strom mindestens 8,5 V betragen.

Subject to technical changes.

This technical documentation is protected by copyright. Translating, photocopying and diseminating it in any form whatsoever - even editings or excerpts thereof - especially as reprint, photomechanical or electronic reproduction or storage on data processing systems or networks is not allowed without the permission of the copyright owner and non-compliance will lead to both civil and criminal prosecution.

Technische Änderungen vorbehalten.

Diese Technische Dokumentation ist urheberrechtlich geschützt. Die Übersetzung sowie die Vervielfältigung und Verbreitung in jeglicher Form – auch als Bearbeitung oder in Auszügen –, insbesondere als Nachdruck, photomechanische oder elektronische Wiedergabe oder in Form der Speicherung in Datenverarbeitungsanlagen oder Datennetzen ohne Genehmigung des Rechteinhabers sind untersagt und werden zivil- und strafrechtlich verfolgt.

ABB Automation Products GmbH
Borsigstraß 2
D-63755 Alzenau
Tel. / Phone +49 (0)60 23 92 - 0
Fax +49 (0)60 23 92 - 33 00
http://www.abb.de/automation
http://www.abb.com

Technische Änderungen vorbehalten
Subject to technical changes
Printed in the Fed. Rep. of Germany
42/11-49 XA Rev. 1.0
Edition 02.01

TSET (SensyTemp ET R)

Resistance thermometers for installation in a thermowell, with measuring inset

10/10-3.24 EN

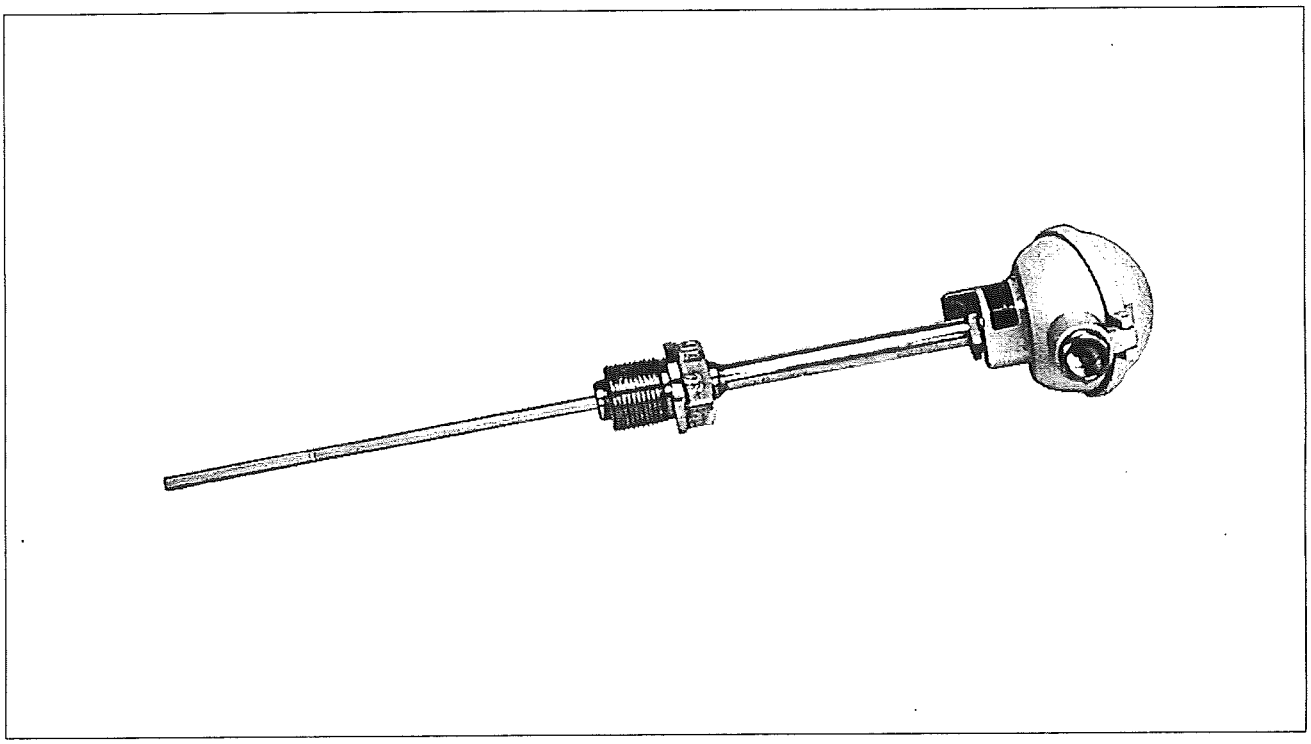

Essential components

- Modular system consisting of measuring inset with connection head, with extension tube as an option
- Head mounted transmitter can be integrated in the connection head

Technical features

- Spring-loaded measuring inset for reliable contact closure
- Installation of a transmitter in the connection head obviates the need for multi-wire circuit
- Interfaces to all current process control systems

Applications

- Vessel construction/apparatus engineering
- Process plants in all branches of industry
- Machinery
- Heating, air-conditioning and ventilation systems
- Chemical process engineering

Description

New plants are often fitted with temperature sensors in two stages:

- Installation of thermometer thermowells in connection with the vessel/pipeline construction
- Addition of a measuring element during a later instrumentation phase

This procedure makes it possible to realise a uniform instrumentation concept in large plants.

The data sheet contains temperature sensors which are suitable for retrofitting in existing thermowells.

Suitable thermowells	Data sheet 10-3.91 EN
Complete resistance thermometers	
with welded protection tube in	Data sheet 10-3.22 EN
with drilled thermowell in	Data sheet 10-3.23 EN

ABB

Sensor design

Example

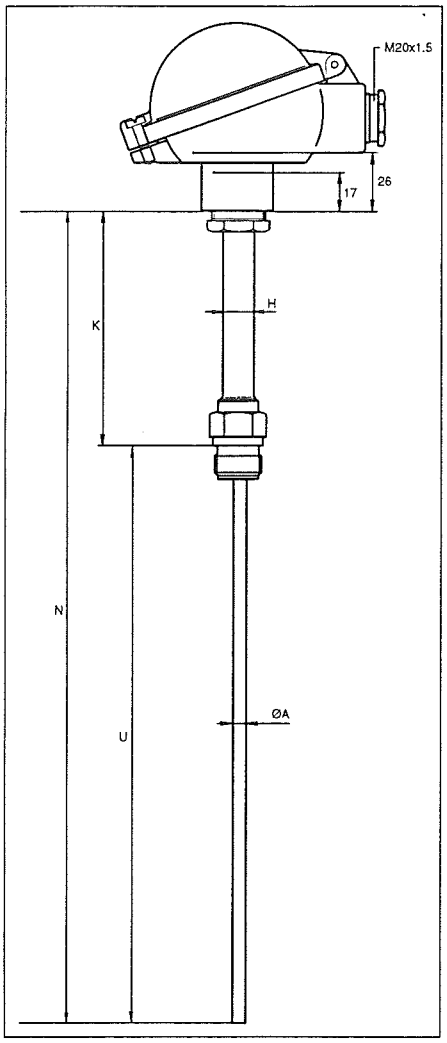

Connection heads

Type **BUZ** aluminium

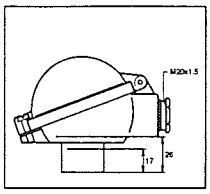

Type **BUZH** aluminium for install. of transmitter

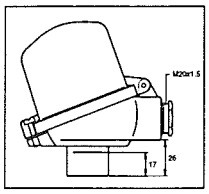

Type **BUKH** polyamide for install. of transmitter

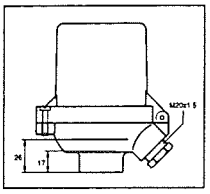

Extension tube

Welded mounting thread cylindrical (M, G)

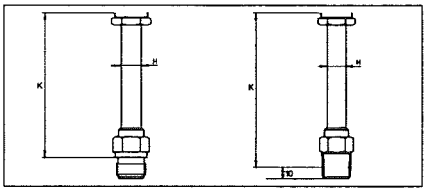

conical (NPT)

Without extension tube with sealing screw

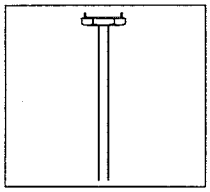

Without extension tube with compression fitting

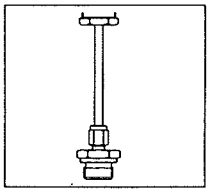

Sensor tip

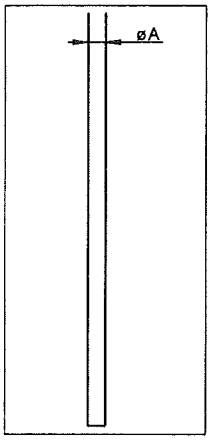

Captions

N = Nominal length
K = Extension tube length
H = Extension tube diameter
U = Insertion length
A = Inset diameter

Ordering information

	Catalog No.								Code		
Resistance thermometer TSET (SensyTemp ET R)	**V10515-**										
Measuring inset											
Ø A = 6 mm		2									
Ø A = 3 mm		1									
Extension tube (cylindric thread type A DIN 3852)											
Thread / Diameter / Length / Material											
M18 x 1.5 / H = 11 mm / K = 150 mm / 1.4571 (AISI 316-Ti)			Y								
M18 x 1.5 / H = 14 mm / K = 150 mm / 1.4571 (AISI 316-Ti)			D								
M14 x 1.5 / H = 11 mm / K = 150 mm / 1.4571 (AISI 316-Ti)			A								
½" NPT / H = 14 mm / K = 150 mm / 1.4571 (AISI 316-Ti)			I								
G½" / H = 14 mm / K = 150 mm / 1.4571 (AISI 316-Ti)			9								
without extension tube / with sealing screw M24 x 1.5			5								
Insertion length											
U = 115 mm	1)			1							
U = 140 mm	1)			2							
U = 200 mm	1)			3							
U = 260 mm	1)			4							
U = ... mm / to be specified (max. 850 mm)	1)			X							
N = ... mm / to be specified (max. 1000 mm)	2)			T							
Connection head											
Type / Material / Cable entry / Surface / prot. degr./-class											
BUZ / aluminium / M20 x 1.5 / painted / IP 66 / NEMA 4 X					1						
BUZH / aluminium / M20 x 1.5 / painted / IP 66 / NEMA 4 X					5						
BUKH / polyamide / M20 x 1.5 / black / IP 66 / NEMA 4 X					F						
Measuring inset											
1 x Pt 100, 2-wire / Non-explosion protected						1					
1 x Pt 100, 3-wire / Non-explosion protected						2					
1 x Pt 100, 4-wire / Non-explosion protected						3					
2 x Pt 100, 2-wire / Non-explosion protected						4					
2 x Pt 100, 3-wire / Non-explosion protected	1)					5					
1 x Pt 100, 2-wire / II 1 G EEx ia IIC T6 PTB 01 ATEX 2200 X						6					
1 x Pt 100, 3-wire / II 1 G EEx ia IIC T6 PTB 01 ATEX 2200 X						7					
1 x Pt 100, 4-wire / II 1 G EEx ia IIC T6 PTB 01 ATEX 2200 X						8					
2 x Pt 100, 2-wire / II 1 G EEx ia IIC T6 PTB 01 ATEX 2200 X	1)					9					
2 x Pt 100, 3-wire / II 1 G EEx ia IIC T6 PTB 01 ATEX 2200 X	1)					0					
Error limit											
Class B / EN 60751 (IEC 60751)							A				
Class A (from -30...350 °C) / EN 60751 (IEC 60751)	3)						F				

Continued on next page

1) only for version with extension tube
2) only for version without extension tube
3) not for 2-wire

Other options:
- other extension tube
- other cable entry
- other head painting
- Tests (see Data Sheet 10/10-3.81 EN)

Ordering information (continued)

			Catalog No.		Code		
Resistance thermometer TSET (SensyTemp ET R)			**V10515-**				
Head mounted transmitter			1)				
without				0			
TR04	fixed measuring range	Standard: 2 or 3-wire circuit	2) 3)	1			
TS02	programmable		2)	6			
TH02	programmable, HART protocol		2)	9			
TF12	PROFIBUS-PA		2)	K			
TR04-Ex	fixed measuring range	Standard: 2 or 3-wire circuit	3) 4)	A			
TS02-Ex	programmable		4)	F			
TH02-Ex	programmable, HART protocol		4)	J			
TF12-Ex	PROFIBUS-PA		4)	L			
Options							
Measruing range = (start value...final value °C)					680		
Compression fitting G¼", Mat. 1.4571 (A 316-Ti), compression ring stainless steel			5) 6)		4C4		
TAG-No. on stainless steel label					490		
4-wire circuit TR04 / TR04-Ex					TMP		

1) Transmitter TS02/TS02-Ex, TH02/TH02-Ex, TF12/TF12-Ex incl. parameterization (measuring range in clear text)
Transmitter TR04/TR04-Ex incl. standard measuring range (clear text) as standard in connection head BUZH and BUKH only
2) only for measuring inset in non-explosion protected version
3) standard measuring ranges in °C: -30/60, 0/60, 0/100 0/120, 0/150, 0/200, 0/250, 0/300, 0/400, 0/600
4) only for measuring inset with (PTB) EEx ia IIC T6
5) only for version without extension tube
6) not for measuring inset Ø = 3 mm

Other versions on request

Other options:
- other extension tube
- other cable entry
- other head painting
- Tests (see Data Sheet 10/10-3.81 EN)

Basic values, deviations of platinum resistance elements acc. to EN 60751 (IEC 60751)							
Temperature	0 °C	100 °C	200 °C	300 °C	400 °C	500 °C	600 °C
Basic value (Ω)	100.00	138.51	175.86	212.05	247.09	280.98	313.71
Tolerance (K) Class B	0.30	0.80	1.30	1.80	2.30	2.80	3.30
Class A	0.15	0.35	0.55	0.75	0.95	1.15	–

Accessories, components

Many of the components of the models listed in the catalog may be ordered as separate components or as modules. In this respect you should refer to Data Sheet 10-3.45 EN (Exchangeable resistance thermometer measuring insets) and 10-3.91 EN (Components for temperature sensors with exchangeable measuring inset).

Other models

This Data Sheet contains only a small selection of our range of resistance thermometers for installing in a thermowell, with measuring inset. See Data Sheet 10-3.03 EN for technical data. Other models can be supplied on request.

ABB Ltd.
Salterbeck Trading Estate
Workington, Cumbria
CA14 5DS
UK
Tel: +44 (0)1946 830 611
Fax: +44 (0)1946 832 661

ABB Inc.
125 E. County Line Road
Warminster, PA 18974
USA
Tel: +1 215 674 6000
Fax: +1 215 674 7183

ABB Automation Products GmbH
Borsigstr. 2
63755 Alzenau
Germany
Tel: +49 551 905-534
Fax: +49 551 905-555

Subject to technical changes.
Printed in the Fed. Rep. of Germany
10/10-3.24 EN 05.04

INSTALLATION AND OPERATING INSTRUCTIONS

BYPASS- LEVEL INDICATOR TYPE BNA / BMG

1. FUNCTIONAL DESCRIPTION: 2
2. APPLICATION: 2
3. ASSEMBLY: 2
4. HAZARD NOTICE: 2
5. NOTICES: 3
6. NOTICES FOR EX-INSTRUMENTS: 3
7. COMMISSIONING: 3

~~8. MAGNETIC SWITCH / LIMITING VALUE: 5~~
~~9. ELECTRICAL CONNECTION OF THE MAGNETIC SWITCH: 5~~
~~10. CAUTION: 5~~
~~11. MAINTENANCE OF THE MAGNETIC SWITCH: 5~~
~~12. FUNCTIONAL TEST OF THE MAGNETIC SWITCH: 5~~
~~13. NOTES FOR MAGNETIC SWITCHES: 6~~
~~14. NOMINAL DATA FOR EX-MAGNETIC SWITCHES: 6~~
~~15. INFORMATIONS FOR EX-MAGNETIC SWITCHES: 7~~

16. LEVEL SENSOR: 8
17. ELECTRICAL CONNECTION OF THE LEVEL SENSOR 8
18. CAUTION: 8
19. MAINTENANCE OF THE LEVEL SENSOR: 8
20. FUNCTIONAL TEST OF THE LEVEL SENSOR 8
21. NOTES FOR LEVEL SENSOR: 9
22. NOMINAL DATA FOR EX-LEVEL SENSOR: 9
23. INFORMATION FOR EX-LEVEL SENSOR: 10

HEINRICH KÜBLER AG
Ruessenstrasse 4, CH-6341 BAAR
Tel. ++41(0)41 766 62 62
Fax ++41(0)41 766 62 63
E-Mail: info@ksr-kubler.com
http://www.ksr-kubler.com

KFG LEVEL AG
Ruessenstrasse 4, CH-6341 BAAR
Tel. ++41(0)41 766 62 82
Fax ++41(0)41 766 62 83
E-Mail: info@kfg-level.com

KÜBLER SVENSKA AB
Box 649
Finntorpsvsvägen 5D
131 21 Nacka
Tel. ++46 8-556 117 60
Fax ++46 8-718 43 77
E-Mail: info@kubler.se

KÜBLER Afrika (Pty) Ltd.
P. O. Box 1292
2040 Honeydew,
South Africa
Tel. ++27 11 675-0616
Fax ++27 11 675-0619
E-Mail: sales@kubler.co.za

KÜBLER SUOMI OY
PL225
01301 Vantaa
Tel. ++358 9-870 09 60
Fax ++358 9-870 09 611
E-Mail: kubler@kubler.fi

1. FUNCTIONAL DESCRIPTION:

The bypass level indicator forms an integral part of a pressure vessel. A chamber is mounted on the side of a tank or container by means of two process connections. This direct connection ensures that the level in the chamber corresponds precisely to the level of the liquid in the tank or container (communicating pipes). Inside the bypass chamber is a cylindrical float with a built-in magnetic system. The concentrated magnetic field produced by the permanent magnet gives a precise reading for the level of liquid in the chamber. A signal is transmitted by the magnetic field through the wall of the chamber to an externally mounted display, as well as to recording and switchgear elements.

2. APPLICATION:

The bypass level indicator is only to be exposed to liquids that allow the float to function reliably and to which the materials used are resistant. Furthermore, the system should only be used for the specified parameters such as pressure, temperature and density. In addition, no contamination, coarse particles and crystallization should be present. Excluded from these requirements are units that are specifically suited for such applications and marked accordingly.

3. ASSEMBLY:

The bypass level indicator (acc. to page 4) is bolted onto the side of the container using a process flange (1) and a suitable seal (2). The raised and flat faces as well as the gaskets have to be mechanically perfectly matched. The correct gasket material has to be used for sealing according to the medium, pressure and temperature.
Remove the base flange (3) and insert the ZVS cylindrical float (4) into the bypass chamber with the inscripti-on "oben" ("top") at the top. Fit the seal (5) and seal the base flange again, tightening the bolts (6) firmly to secure it. Screw in the vent and drain plugs (11), if existing.
If not installed by the factory, the magnetic roller display (7) will be mounted with two clamps onto the chamber (9). Further the level sensor will be mounted onto the chamber or MRA-profile. The magnetic switches (10), depending on type, will be mounted onto the MRA-profile or chamber at the required switching level.

4. HAZARD NOTICE:

- It is not allowed to make a temporary installation if components or whole instruments are faulty or wrong, particularly when components are missing.
- Instruments and their accessory parts should not be used to secure lifting gear, to act as foot rests or any other mechanical aids that could damage the installation.
- Where there is a hazard or danger present, warning signs have to be displayed according to the local and national standards. Any isolation device fitted must also comply with these standards.
- The operators have to wear protection clothes according to the local circumstances and regulations. The operators have to be trained and given instructions as well as to be in possession of the technical data.
- The operator is responsible, to ensure that unauthorized persons do not have access to the installations or instruments and these operations.
- If passing the instruments and installations on to a third party, all documentation has to be included indicating the correct mounting procedures, operational details and hazards.

<u>Precautions are necessary for:</u>

- heat radiation from outside on to the instruments.
- heat radiation from the instruments to the surroundings.
- electrical heating systems.
- exposure to medium, gas, mist or steam.

5. NOTICES:

- The bypass level indicator must not be subjected to any mechanical loads, vibrations or shock influences. If these loads are existing, supporting or protecting elements have to be used.
- Mechanical shocks transmitted through the medium to the instrument is not allowed.
- For flammable or explosive mediums, instruments with 94/9/EG ATEX approvals have to be used.
- Disposal of instruments should be according to regional and national directions and guidelines. By disposal it is possible that residues of the medium remain within the instrument.
- The conditions of the environment have to be optimised so that all indicating instruments on-site can be read correctly and positioned so that they may be seen in a normal field of view.

TRANSPORTATION SPECIFICATIONS:
These instruments should be packed with respect to the delicate nature of some of the parts. Outer packing such as wooden cases should be marked with fragile or similar signs to help protect the instrument.

6. NOTICES FOR EX-INSTRUMENTS:

- The bypass level indicator may be used in accordance with 94/9/EG ATEX approvals in Zones 1 and 2 and in gas groups IIA, IIB and IIC, which are subject to explosion hazards as a result of combustible substances in the range of temperature classes T1 to T6 or of the values specified in the separate certificates for the integral level sensors and magnetic switches.
  (This prescription applies to the surrounding of the electrical components mounted onto, namely for the level sensor and the magnetic switch).

- If temperatures in excess of 70°C occur at the cable gland or above 80°C at the wire terminations, only a verified heat-resistant cable for the relevant temperature may be used. The cable gland must be suitable for this temperature.

- The metal enclosures of bypass level indicators must be electrically bonded to the equipment's earth bonding system.

- Modifications to the unit may only be carried out by the manufacturer.

NOTES FOR THE AREA OF USE

- No electrical components may be fitted inside the parts of the bypass level indicator that are in contact with the medium. Therefore they have to be according to CEN-Norm EN 1127-1:1997. The requests for this norm, in particular also the requests of the figures 6.2.3.2 will be met: the mentioned internal areas are to be kept free of leaks and they must not contain any hot components that produce sparks.

- According to the present state of knowledge, no reservations exist concerning safety regulations to use the internal areas of the bypass chambers within explosion endangered area of zone 0.

7. COMMISSIONING:

Fill the container and switch on the electrical control, where provided. Check the MNA or MRA magnetic roller display and check the switching function of the magnetic switches to make sure that they are operating properly. Use a connecting cable for the level sensor of at least 3 x 0.5 mm^2. Route cable from measuring transducer (switchgear cabinet) to the bypass level sensor and insert into the terminal box using a cable gland and seal it.

The level indicator is ready for operation.

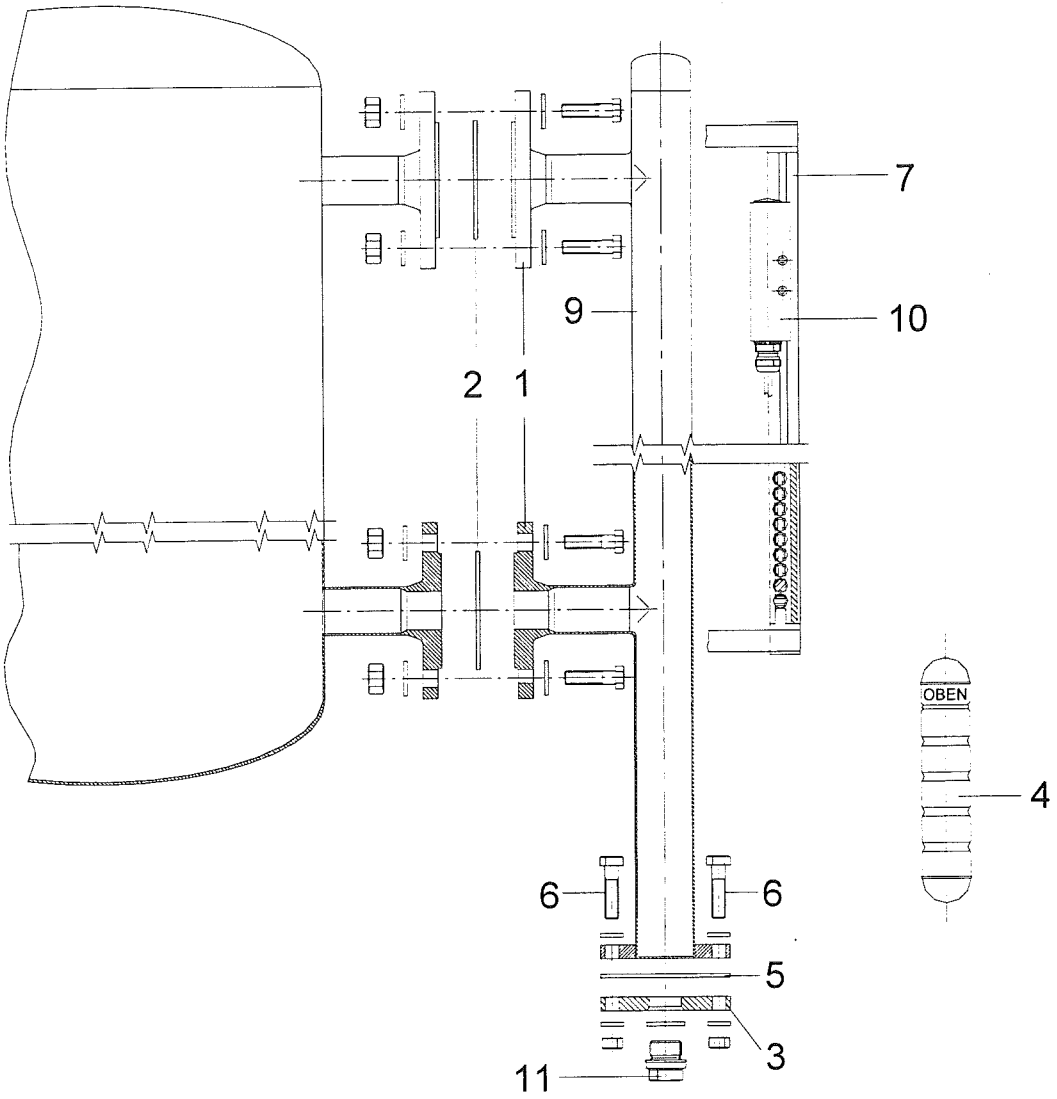
7
9
10
2
1
OBEN
4
6
6
5
3
11

16. LEVEL SENSOR:

Level sensors are used for the electrical continuous remote display of levels. The resistance measuring chain, which is mounted outside the chamber, transmits the current level through the wall of the chamber using the magnetic system of the float. The resistance is converted into a (0)4 - 20 mA analog signal by means of a transducer and the reading is output on a digital or analog display.

17. ELECTRICAL CONNECTION OF THE LEVEL SENSOR

The electrical connection must comply with the safety regulations for installing electrical systems and equipment that apply in the country where the unit is installed and this work may only be undertaken by qualified personnel.

The level sensor is to be connected in the junction box in accordance with the connection plan. The level sensor is to be wired with the electronic transmitter connected in the outgoing circuit.

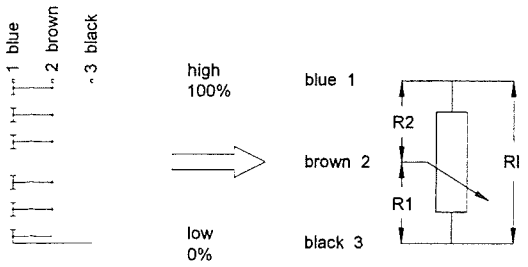

The cable gland is to be sealed and the lid of the junction box is to be properly sealed.

Control unit:
Level sensors with integral head measuring transducers are to be connected in accordance with the connection plan in the junction box. Information on terminal assignment can be found in the relevant connection plan. The connection data can be found in the appropriate operating instructions.

18. CAUTION:

- The operator has to guarantee that instruments that have an earth, will be earthed.
- Instruments with a connection cable are not earthed and can be alive in case of error.
- These instruments are only allowed to be operated with extra-low voltage.
- Instrument cables must not be run in trunking or close proximity with power lines that have heavy switching functions. Such power cables may cause switch damage from high-voltage spikes. Shielded connecting lines have to be used. These lines have to be earthed one-side.
- It is important that an adequate and correct power supply is used

19. MAINTENANCE OF THE LEVEL SENSOR:

The units must be installed and commissioned in accordance with the generally accepted rules of engineering practice. When in service, the units do not require any maintenance providing that parameters such as the type of medium, density, temperature and pressure are complied with.

20. FUNCTIONAL TEST OF THE LEVEL SENSOR

The user is responsible for periodically carrying out a functional test or, at the very least, a visual check.

A functional test can be performed on the measuring chain with the sensor either removed or in situ. If the units are in situ, it must be possible to fill the system.
1. Remove connecting cable.
2. Connect ohmmeter to two cores.
3. Move float manually or by filling the system from the min. to max. points.
4. The resistance reading displayed changes continuously as a function of the core colors connected.

BLACK-BROWN (R1)	BLUE-BROWN (R2)	BLACK-BLUE (Ri)
Resistance increases in proportion to the height of the float	Resistance falls from the value of the overall resistance in inverse proportion to the height of the float	Display of overall resistance (Ri)

21. NOTES FOR LEVEL SENSOR:

- Do not operate level sensors in close proximity to powerful electromagnetic fields. (Minimum clearance: 1 m.)
- Only use in conjunction with a suitable measuring transducer.
- When used on safety barriers, the overall resistance of the reed measuring chain (Ri) must be between 1 k to 100 k Ohms.
- The level sensor must not be subjected to any mechanical loads, vibrations or shocks. If these loads are existing, support or protecting elements have to be used.
- Mechanical shocks transmitted through the medium on to the instrument is not allowed.
- For flammable or explosive mediums, instruments with 94/9/EG ATEX approvals have to be used.
- Disposal of the instruments must be in accordance with the regional and national directions and guidelines. By disposal it is possible that residues of the medium remain within the instrument.
- The conditions of the environment have to be optimised so that all indicating instruments on-site can be read correctly and be positioned within a normal field of view.

TRANSPORTATION SPECIFICATIONS:
These instruments should be packed with respect to the delicate nature of some of the parts. Outer packing, such as wooden cases should be marked with fragile or similar signs to help protect the instruments.

22. NOMINAL DATA FOR EX-LEVEL SENSOR:

VERSIONS WITH «INTRINSIC SAFETY» PROTECTION RATING

Supply circuit as a passive n-terminal circuit:

- For protection rating EEx ia IIC
- only for connection to a certified intrinsically safe circuit
- Maximum values:
  $U_i \leq 30$ V
  $I_i \leq 150$ mA
- The effective self inductance and capacitance are negligible.

Supply circuit with separately certified integral measuring transducer:

- For intrinsically safe protection rating EEx ia IIC / EEx ib IIC
- only for connection to a certified intrinsically safe circuit.
- Maximum current:
  In accordance with the nominal data of the separately certified measuring transducer.

VERSION WITH "EXPLOSION PROOF" PROTECTION RATING

Supply circuit as a passive n-terminal circuit:

- Only for connection to a circuit with safe limitation of the electrical parameters to the following values:
  Rated voltage U_N = 30 VDC/AC
  Rated current I_N = 150 mA

If the instrument is delivered without the cable gland, it is only allowed to mount a cable gland in accordance to the norm EN 50018 (pressure-proof encapsulation EExd).

23. INFORMATION FOR EX-LEVEL SENSOR:

- The level sensor may be used in accordance with 94/9/EG ATEX approvals in Zones 1 and 2 and in gas groups IIA, IIB and IIC, which are subject to explosion hazards as a result of combustible substances in the range of temperature classes T1 to T6 T6 respectively the listed values in the below mentioned table.

- The assignment between the temperature classes and the maximum ambient temperature has to be taken from the following table.

Temperature class	Ambient temperature	
	EEx ia/ib IIC	EEx d (ia/ib) IIC
T6	80°C	80°C
T5	95°C	95°C
T4	130°C	120°C
T3	180°C	

Separate certified control units, when installed, also have operational ambient temperature limits that have to be observed.

- If temperatures in excess of 70°C occur at the cable gland or above 80°C at the wire terminations, only a verified heat-resistant cable for the relevant temperature may be used. The cable gland must be suitable for this temperature.

- Metallic or electrically conductive housings on level sensor must be earthed to the main equipment.

- Equipment for use in hazardous locations is identified with a special rating plate containing all data relevant to explosion protection.

ZETKAMA Fabryka Armatury Przemysłowej S.A.
ul. Śląska 24, 57-300 Kłodzko, Poland
www.zetkama.com.pl

ZETKAMA

ZAWÓR ZAPOROWY Z GRZYBEM DŁAWIĄCYM żeliwny grzybkowy, kołnierzowy		ABSPERVENTIL MIT DROSSELKEGEL aus Gußeisen, und Flanschanchlüssen	STOP VALVE WITH THROTTLING DISC cast iron, with flanged ends
PN16 (1,6 MPa)	DN 15 - 300	kadłub prosty in Durchgangsform a straight way form	**Fig. 225**
PN25 (2,5 MPa)	DN 15 - 200		
PN40 (4,0 MPa) *)	DN 15 - 150		

*) Kadłub / Gehäuse / Body - Pokrywa / Deckel / Bonnet - GP 240 GH (GS-C25-1,0619)

ZASTOSOWANIE

Woda przemysłowa zimna i gorąca, para wodna, czynniki obojętne.

ZALETY

- łatwość sterowania,
- nie wymaga konserwacji,
- bezpieczny ekologicznie.

ANWENDUNG

Kalt- und Heißbrauchwasser, Dampf, neutrale Flüßigkeiten.

VORTEILE

- leichte Regulierung,
- wartungsfrei,
- umweltfreundlich.

APPLICATION

Industrial cold and hot water, steam, neutral fluids.

ADVANTAGES

- easy to handle,
- no maintenance,
- environment-friendly.

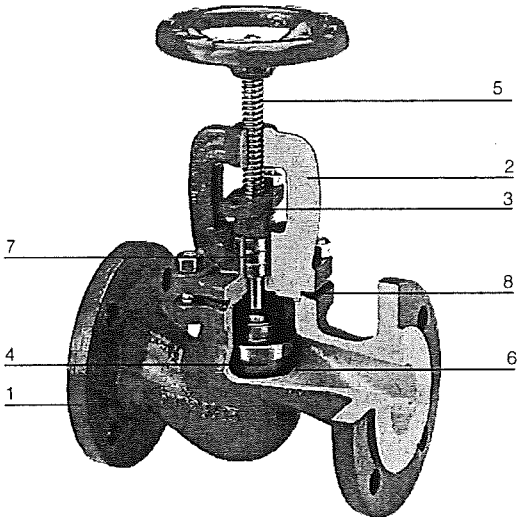

MATERIAŁY • WERKSTOFFE • MATERIALS		Standard	Wykonanie dodatkowe Zusätzliche Ausführung Additional design		
		Fig. 225A01	**Fig. 225A02**	**Fig. 225C01**	**Fig. 225C02**
1.	Kadłub / Gehäuse / Body	EN-GJL-250		EN-GJS-400-18- LT	
2.	Pokrywa / Deckel / Bonnet				
3.	Dławik / Stopfbuchse / Gland	DN 15-32 - EN-GJS-500-7 DN 40-300 - EN-GJL-250		EN-GJS-400-18-LT	
4.	Grzyb / Kegel / Disc	X20Cr13 1.4021	CuSn10-B	X20Cr13 1.4021	CuSn10-B
5.	Trzpień / Spindel / Stem		CuZn40Pb2		CuZn40Pb2
6.	Pierścień kadłuba / Sitzring / Seat ring	X12Cr13 1.4006	CuSn10-B	X12Cr13 1.4006	CuSn10-B
7.	Szczeliwo / Stopfbuchspackung / Gland packing	Grafit / Reingraphit / All-graphite			
8.	Uszczelka / Dichtung / Seal	Graphit - CrNiSt			
Max. temperatura pracy / Max. Betriebstemperatur / Max. working temperature		**300°C**	**225°C**	**350°C**	**225°C**
Kadłub + pokrywa/ Gehäuse + Deckel/ Body + bonnet ⇒ A - EN-GJL-250 C - EN-GJS-400-18-LT					

Uwaga:
1. Materiał wg EN.

Vermerk:
1. Material nach EN.

Note:
1. Material in accordance to EN.

Fig. 225

Zawór ze wskaźnikiem Ventil mit Anzeigevorrichtung Valve with indicator	Zawór bez wskaźnika Ventil ohne Anzeigevorrichtung Valve without indicator
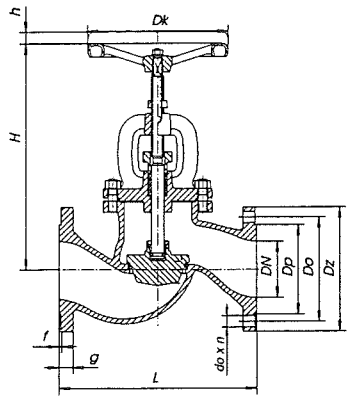	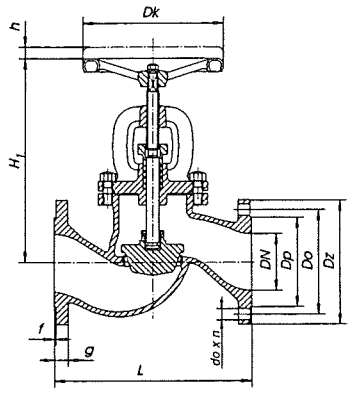

DN	PN16						PN25						PN16, PN25						
	Dz	Dp	Do	doxn	g	f	Dz	Dp	Do	doxn	g	f	Dk	h	L	H	H1	♦	Kv
mm	mm						mm						mm					kg	m³/h
15	95	45	65	14x4	14	2	95	46	65	4x14	14	2	100	14	130	190	173	3,0	4,7
20	105	58	75	14x4	16	2	105	56	75	4x14	16	2	100	14	150	190	173	3,9	4,5
25	115	68	85	14x4	16	2	115	65	85	4x14	16	2	120	25	160	205	180	5,0	9,1
32	140	78	100	18x4	18	2	140	76	100	4x19	18	2	120	31	180	221	188	6,5	13,0
40	150	88	110	18x4	18	3	150	84	110	4x19	19	3	140	23	200	249	231	9,5	20,0
50	165	102	125	18x4	20	3	165	99	125	4x19	19	3	140	30	230	262	238	12,5	30,0
65	185	122	145	18x4	20	3	185	118	145	8x19	19	3	160	40	290	298	265	17,6	60,0
80	200	138	160	18x8	22	3	200	132	160	8x19	19	3	180	45	310	335	295	24,0	90,0
100	220	158	180	18x8	24	3	235	156	190	8x23	19	3	200	50	350	377	342	36,8	125
125	250	188	210	18x8	26	3	270	184	220	8x28	19	3	250	50	400	427	382	52,6	200
150	285	212	240	22x8	26	3	300	211	250	8x28	20	3	320	60	480	476	426	76,5	270
200	340	268	295	22x12	30	3	360	274	310	12x28	22	3	360	80	600	570	526	108,5	550
250	375	312	335	26x12	32	3	-	-	-	-	-	-	360	100	730	675	638	200,0	950
300	460	378	410	26x12	32	4	-	-	-	-	-	-	500	100	850	735	710	-	-

	PN16	PN25
Ciśnienie próbne kadłuba Prüfdruck Pressure test of the body	2,4 MPa	3,75 MPa
Ciśnienie zamknięcia Druck des Verschlusses Pressure of the closure	1,76 MPa	2,75 MPa

Kołnierze Flansche Flanges	EN 1092 - 2

Długość zabudowy Baulänge Face to face length	EN558-1 ➡ **1** - Fig. 225, **8** - Fig. 226 (DIN3202 ➡ **F1** - Fig. 225, **F32** - Fig.

Dopuszczalna różnica ciśnień Differenzdruck Differential pressure	DN	200 mm	250 mm	300 mm
	Δp	1,0 MPa	0,6 MPa	0,4 MPa

EN 1092-2: 1997

Ciśnienie - temperatura
Druck - Temperatur
Pressure - temperature

EN-GJL-250		EN-GLS-400-18-LT			
PN16		PN16		PN25	
°C	bar	°C	bar	°C	bar
-10	16	-10	16	-10	25
120	16	120	16	120	25
150	14,4	150	15,5	150	24,3
180	13,4	200	14,7	200	23
200	12,8	250	13,9	250	21,8
230	11,8	300	12,8	300	20
250	11,2	350	11,2	350	17,5
300	9,6	-	-	-	-

Na życzenie klienta
Auf Wunsch der Kunden
On customer's request

Fig. 226 DN 15 - 300, PN16

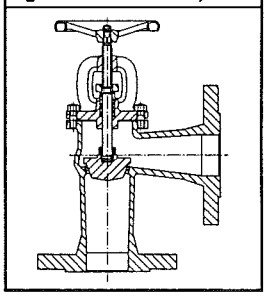

ZAMAWIANIE

W zamówieniu należy podać Fig. i DN.
Informacje mają charakter ogólny.
Szczegółowych informacji udziela dział Marketingu.

BESTELLUNGEN

Bei Bestellungen sind Fig. und DN anzugeben.
Es wurden allgemeine Informationen angegeben.
Weitere Angaben werden von der Marketingabteilung mitgeteilt.

ORDERING

When ordering please specify: Fig. and DN.
These data are for information only.
Our marketing department provides you with detailed specifications.

Sekretariat tel. (0048) (074) 867 28 48
865 21 00
fax (0048) (074) 865 21 01
e-mail: zetkama@zetkama.com.pl

Sprzedaż krajowa tel. (0048) (074) 865 21 52
865 21 88
fax (0048) (074) 865 21 98
e-mail: spkraj@zetkama.com.pl

Marketing tel. (0048) (074) 865 21 74
fax (0048) (074) 865 21 98
e-mail: marketing@zetkama.com.pl

Zastrzega się prawo do zmian konstrukcyjnych / Technische Änderungen vorbehalten / Technical data alteration reserved

Wydanie / Ausgabe / Edition: 02/2004

RITAG®
Armaturenwerk

Zwischenflansch-Rückschlagventil
Wafer Type Check Valve

SR 20.40-St

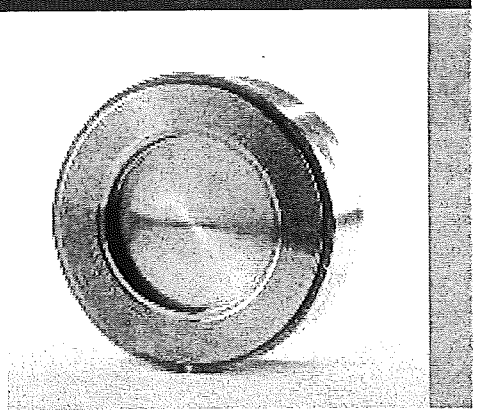

Einsatzgrenzen *(Pressure/Temperature Ratings)*

	TMA (°C)	-10	200	300
PN 40	PMA (bar)	16	33	24

Leckrate nach DIN 3230 Teil 3, BO3 (met., PTFE) oder BO1 (NBR, EPDM, FKM)
Leakage acc. to DIN 3230 part 3, BO3 (met., PTFE) or BO1 (NBR, EPDM, FKM)

Werkstoffe *(Materials)*

Gehäuse/*Body*	Platte/*Discs*	Feder/*Spring*
1.0570 (DN 15 - 40)	1.4301	1.4571 [1]
1.0421 (DN 50 - 100)	1.4301	1.4571 [1]

[1]) bei Temperaturen über 300°C bitte Nimonic-Feder wählen
[1]) *when exceeding 300°C operating temperature please use an Nimonic spring*

Elastische Dichtung möglich
Elastic seat rings available

Öffnungsdrücke *(Opening Pressures)*

DN	P_0 (mbar) ↔	↑	↓	Ohne Feder/ *without spring* ↑
15	20	24	16	4
20	20	24	16	4
25	20	24	16	4
32	20	24	16	4
40	20	24,5	15,5	4,5
50	20	25	15	5
65	20	25,5	14,5	5,5
80	20	26,5	13,5	6,5
100	20	26,5	13,5	6,5

↔ ↑ ↓ = Durchflussrichtung/*Flow direction*

DN 15 - 100
PN 6 - 40

Verwendung
- Neutrale Flüssigkeiten
- Öle
- Luft
- Fluidgruppe 1 gemäß DGRL 97/23/EG

Application
- *Neutrally Fluids*
- *Oil*
- *Air*
- *Fluidgroup 1 acc. to PED 97/23/EC*

Technische Änderungen vorbehalten 09/2002
Technical modifications reserved 09/2002

RITAG Ritterhuder Armaturen GmbH & Co.
Armaturenwerk KG
Industriestraße 7-9
D-27711 Osterholz-Scharmbeck

Phone +49 (0) 47 91-92 09-0
Fax +49 (0) 47 91-92 09-85
eMail: contact@ritag.com
Internet: www.ritag.com

RITAG Armaturenwerk

Zwischenflansch-Rückschlagventil SR 20.40-St

Wafer Type Check Valve

Maße und Gewichte *(Dimensions and Weights)*

Maße/*dimensions* in mm

DN	L	D_1 (PN6)	D_2 (PN10-40)	d_0	d_1	kg
15	16	43	51	15	28	0,15
20	19	53	61	20	33	0,25
25	22	64	71	25	41,5	0,30
32	28	76	82	32	51,5	0,60
40	31,5	86	92	40	58,5	0,80
50	40	96	108	48,5	71,5	1,30
65	46	116	127	63	90	2,00
80	50	132	142	77	100	2,30
100	60	152	162	96	126	3,50

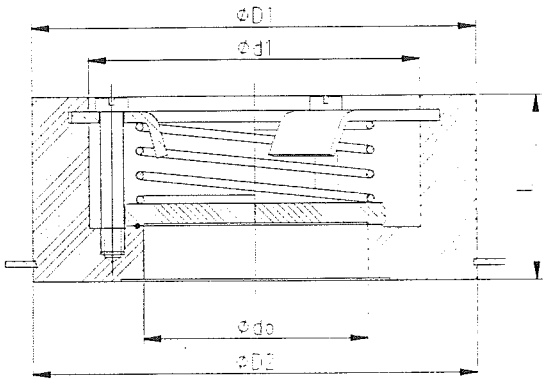

Baulänge nach EN 558-1, Reihe 49
Face/Face dimension acc. to EN 558-1, line 49

Passend zwischen Flansche EN 1092-1, Form B1
For fitting between flanges acc. to EN 1092-1, form B1

Druckverlustdiagramm *(Pressure Drop Chart)*

Die Diagrammwerte gelten für Wasser bei 20°C. Sie resultieren aus Messungen an Ventilen beim Einbau in horizontaler Leitung. Beim Einbau in vertikaler Leitung ergeben sich im Teilöffnungsbereich unbedeutende Abweichungen. Um Druckverluste bei anderen Medien zu ermitteln, ist zuvor der äquivalente Wasservolumenstrom nach folgender Formel zu berechnen:

Graph readings apply to water at 68° F (20° C). They result from messurements on valves installed in horizontal pipes. For installation in vertical pipes insignificant devitations occur in the partial opening. In order to determine pressure losses for other media the equivalent water flow has to be calculated before applying the following formula:

$$\dot{V}_W = \dot{V}\sqrt{\frac{\rho}{1000}}$$

$\dot{V}_W$ [m³/h]	äquivalenter Wasservolumenstrom *equivalent water flow*
ρ [kg/m³]	Dichte des Mediums (Betriebszustand) *density of medium at working conditions*
$\dot{V}$ [m³/h]	Volumenstrom des Mediums (Betriebszustand) *flow of medium at working conditions*

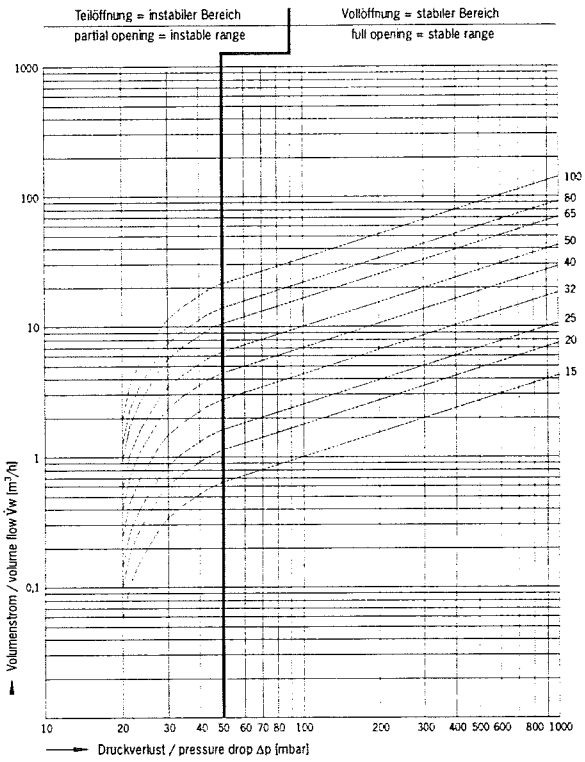

Technische Änderungen vorbehalten 09/2002
Technical modifications reserved 09/2002

RITAG Ritterhuder Armaturen GmbH & Co.
Armaturenwerk KG
Industriestraße 7-9
D-27711 Osterholz-Scharmbeck

Phone +49 (0) 47 91-92 09-0
Fax +49 (0) 47 91-92 09-85
eMail: contact@ritag.com
Internet: www.ritag.com

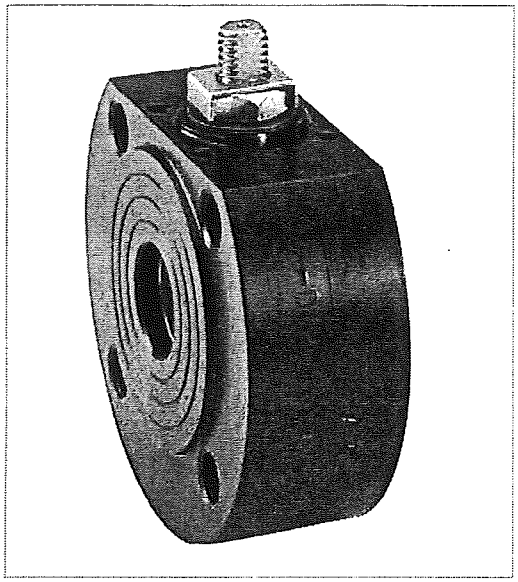

ART. 515 PN 16

Zawór kulowy 2-drogowy, pełnoprzelotowy, z korpusem płaskim, kołnierzowy, ze stali węglowej

2-way full-bore flat-body flanged carbon steel ball valve

Wykonanie standardowe:

Kołnierze wg: UNI 2223 i 2229 PN 16
DIN 2501 BL.1
Dostępne na życzenie wg UNI (PN 25-40-64-100) ANSI B16.5 - ANSI B16.10 (150 RF, 300 RF, 600 RF).
Ogólna specyfikacja: BS 5351; („Fire safe" odpowiadający BS 6755 na życzenie)
Temperatury robocze: od -20°C do +150°C
Ciśnienie robocze: PN 16; PN 25 - PN 40 - PN 64 na życzenie
Zakres mediów: powietrze, woda, gaz, ropa naftowa i produkty petrochemiczne.

Standard executions:

Flanges as per UNI 2223 and 2229 PN 16,
DIN 2501 BL.1
Available on request UNI (PN 25-40-64-100) ANSI B16.5 – ANSI B16.10 (150 RF, 300 RF, 600 RF)
General specifications: BS 5351
("FIRE SAFE" conforming to BS 6755 on request)
Working temperature: from -20°C to +150°C
Working pressure: PN 16;PN 25 - PN 40 - PN 64 on request
Fluid range: air, water, gas, petroleum and petrochemical products.

V6

Na życzenie:

Płaszcz grzejny.
Uszczelki z :
PTFE ze szkłem;
PTFE z grafitem węglowym;

Inne zastosowania: prosimy o kontakt z naszym biurem technicznym.

On request:

Heating jackets.
Seals made of:
PTFE with glass
PTFE with carbon graphite

For other applications, please contact our technical department.

Świadectwa:

Zgodność z Dyrektywą UE 97/23 EC "PED"

Approvals:

According to 97/23 EC "PED"

KODY ZAWORÓW W WYKONANIU STANDARDOWYM
VALVE CODES IN STANDARD EXECUTION

Rozmiar *size*		DN 15	DN 20	DN 25	DN 32	DN 40	DN 50	DN 65	DN 80	DN 100	DN 125	DN 150
Bez dźwigni *Free shaft*		V515F604	V515F605	V515F606	V515F607	V515F608	V515F609	V515F610	V515F611	V515F612	V515F613	V515F614
Masa *weight*	*kg*	1,2	1,6	2,3	3,7	3,9	5,4	9,8	13,2	19,5	50	50
Z dźwignią *with lever*		L515F604	L515F605	L515F606	L515F607	L515F608	L515F609	L515F610	L515F611	L515F612	L515F613	L515F614
Masa *weight*	*kg*	1,35	1,8	2,5	4	4,2	5,8	10,2	13,7	20	51	81

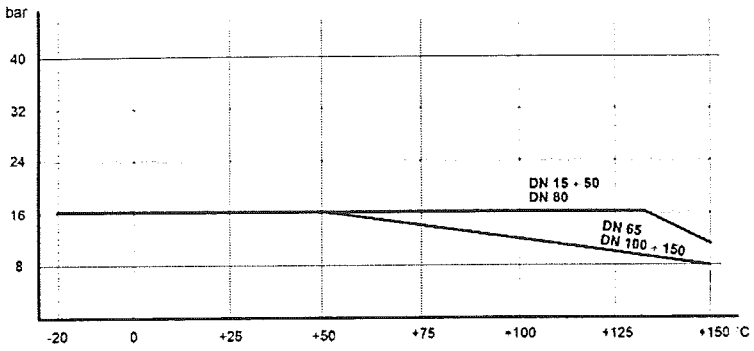

Charakterystyka ciśnienie/temperatura

pressure/temperature diagram

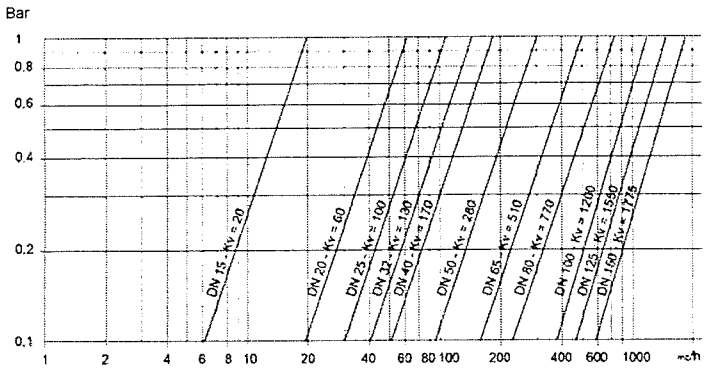

Charakterystyka przepływ-spadek ciśnienia i znamionowy współczynnik Kv
Kv jest współczynnikiem wyrażonym w m^3/h (dla wody o temperaturze 15°C) powodującym spadek ciśnienia o wartości 1 bar

flow-pressure loss diagram and Kv nominal coefficient.
Kv is the coefficient, expressed in m^3/h (with water at 15°C) causing a pressure loss of 1 bar.

V6

MOMENT ROZRUCHOWY w Nm *BREAK AWAY TORQUES in Nm*

rozmiar size	DN 15	DN 20	DN 25	DN 32	DN 40	DN 50	DN 65	DN 80	DN 100	DN 125	DN 150
PN 0 bar											
PN 16 bar	6	11	17	28	33	50	70	100	200	275	520
PN 25 bar											
PN 40 bar											

Moment może się zmieniać zależnie od temperatury i rodzaju medium; należy stosować współczynnik bezpieczeństwa 1,5. Wartość momentu może spadać przy dużej częstotliwości pracy.
Torque can vary depending on temperature and type of fluid; a safety factor of 1.4 must be applied. Torque can drop on high frequency of operations

ZAWÓR TYP 515 *VALVE TYPE 515*

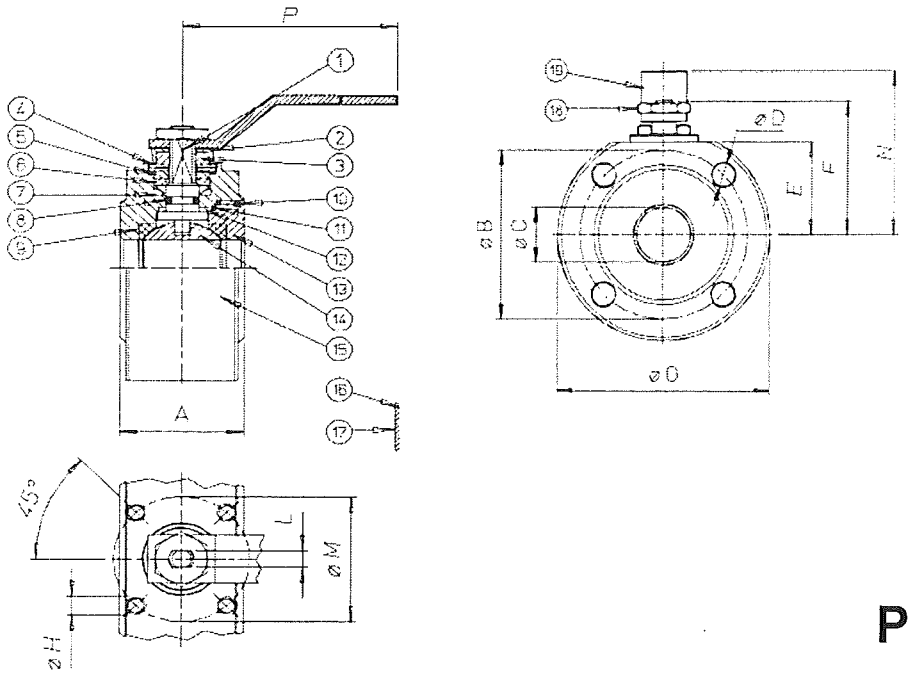

PN 16

MATERIAŁY *MATERIALS*

1) Wałek Shaft	AISI 316	1.4401	UNI X5CrNiMo 17 12
2) Oprawa nakrętki Nut holder	AISI 304	1.4301	UNI X5CrNi 18 10
3) Nakrętka zabezpieczająca Lock nut	AISI 304	1.4301	UNI X5CrNi 18 10
4) Sprężyna Spring	50Crv4		
5) Pierścień Ring	AISI 304	1.4301	UNI X5CrNi 18 10
6) Pierścień dławika nakrętki Gland nut ring	AISI 304	1.4301	UNI X5CrNi 18 10
7) Uszczelnienia górne ** Top sealing **	P.T.F.E.		
8) O-ring ** O-ring **	FKM		
9) Uszczelki Seals	P.T.F.E.		
10) O-ring O-ring	FKM		
11) Uszczelka nakrętki wieńcowej Ring nut sealing	P.T.F.E.		
12) Uszczelnienie dolne Bottom sealing	P.T.F.E.		
13) Nakrętka wieńcowa Ring nut	A105		
14) Kula Ball DN15 - DN 40	AISI 316	1.4401	UNI X5CrNiMo 17 12
14) Kula Ball DN50 - DN150	AISI 304	1.4301	UNI X5CrNi 18 10
15) Korpus Body	A105		
16) Śruba uchwytu Holder screw	AISI 304	1.4301	UNI X5CrNi 18 10
17) Uchwyt Holder	AISI 304	1.4301	UNI X5CrNi 18 10
18) Nakrętka dźwigni Lever nut	AISI 304	1.4301	UNI X5CrNi 18 10
19) Dźwignia Lever	AISI 304	1.4301	UNI X5CrNi 18 10

** DN 125-150 uszczelniane PTFE, uszczelnienia obciążone bez O-ringu. *DN 125-150 tight with PTFE loaded seals without o-ring.*

V6

WYMIARY *DIMENSIONS*

Rozmiar Size	A	øB	øC	øD	E	F	øG	øH	L	øM	otwory holes	N	P
DN15	35	65	15	M12	31	48	90	M5	6	36	4	65	140
DN20	38	75	20	M12	34	51	100	M5	6	36	4	70	140
DN25	43	85	25	M12	39,5	62,5	110	M5	8	42	4	82	180
DN32	50	100	32	M16	46	67	130	M5	8	42	4	85	180
DN40	60	110	40	M16	50	80	140	M6	10	50	4	102	230
DN50	70	125	50	M16	57	87	150	M6	10	50	4	110	230
DN65	95	145	65	M16	80	119,5	175	M8	14	70	4	137	350
DN80	118	160	78	M16	90	129,5	190	M8	14	70	8	150	350
DN100	140	180	96	M16	101	148,5	220	M10	16	102	8	165	508
DN125	170	210	118	M16	-	-	255	M10	16	102	8	240	400
DN150	210	240	144	M20	-	-	295	M12	26	125	8	270	500

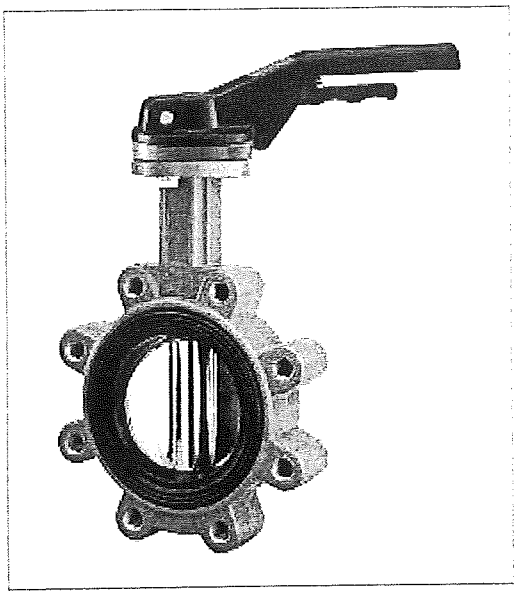

ART. 382-384-389

Zawór motylkowy do zabudowy pomiędzy kołnierzami, typu "Lug".

Butterfly valve to be inserted between flanges, "Lug" type.

Wykonanie standardowe:
Dostępny zakres: od DN 40 do DN 500
PN 10 - PN 16 - ANSI 150
Standardowe kołnierze: *PN 10 - PN 16 - od DN 40 do DN 150; PN 10 od DN 200 do DN 500.*
Inne kombinacje na żądanie.
Odległość między czołami kołnierzy wg ISO 5752.
Zawieradło zaworu wg ISO 5211
Próby zaworu wg ISO 5208:
1) szczelność: 1,1 x PN
2) wytrzymałość korpusu: 1,5 x PN
Inne próby na żądanie.
Temperatury robocze:
EPDM od -40°C do +120°C (limit)
EPDM od -40°C do +90°C (work)
NBR od -25°C do +90°C
FKM od -20°C do +200°C
PTFE od -20°C do +150°C

Ciśnienie robocze miedzy kołnierzami:
PN 16 bar dla DN 40÷200
PN 10 bar dla DN 250÷500

Standard executions:
Available range: from DN 40 to DN 500
PN 10 - PN 16 - ANSI 150
Standard flanges: PN 10 - PN 16 - from DN 40 to DN 150; PN 10 from DN 200 to DN 500.
Other combinations on request.
Face to face gauges as per ISO 5752.
Valve head as per ISO 5211
Valve test as per ISO 5208:
1) tightness: 1,1 x PN
2) body resistance: 1,5 x PN
Other tests on request.
Working temperature:
EPDM from -40°C to +120°C (limit)
EPDM from -40°C to +90°C (work)
NBR from -25°C to +90°C
FKM from -20°C to +200°C
PTFE from -20°C to +150°C

Working pressure between flanges:
PN 16 bar for DN 40÷200
PN 10 bar for DN 250÷500

Na zamówienie:

Temperatura pracy:
SILICONE od -60°C do +200°C
HYPALON od -20°C do +120°C

Dla innych zastosowań, skontaktować się z działem technicznym.

On request:

Working temperature:
SILICONE from -60°C to +200°C
HYPALON from -20°C to +120°C

For other applications, please contact our technical department.

Certyfikaty:

Approvals:

ZAWÓR TYPU 382-384-389 Z DŹWIGNIĄ *VALVE TYPE 382-384-389 WITH LEVER*

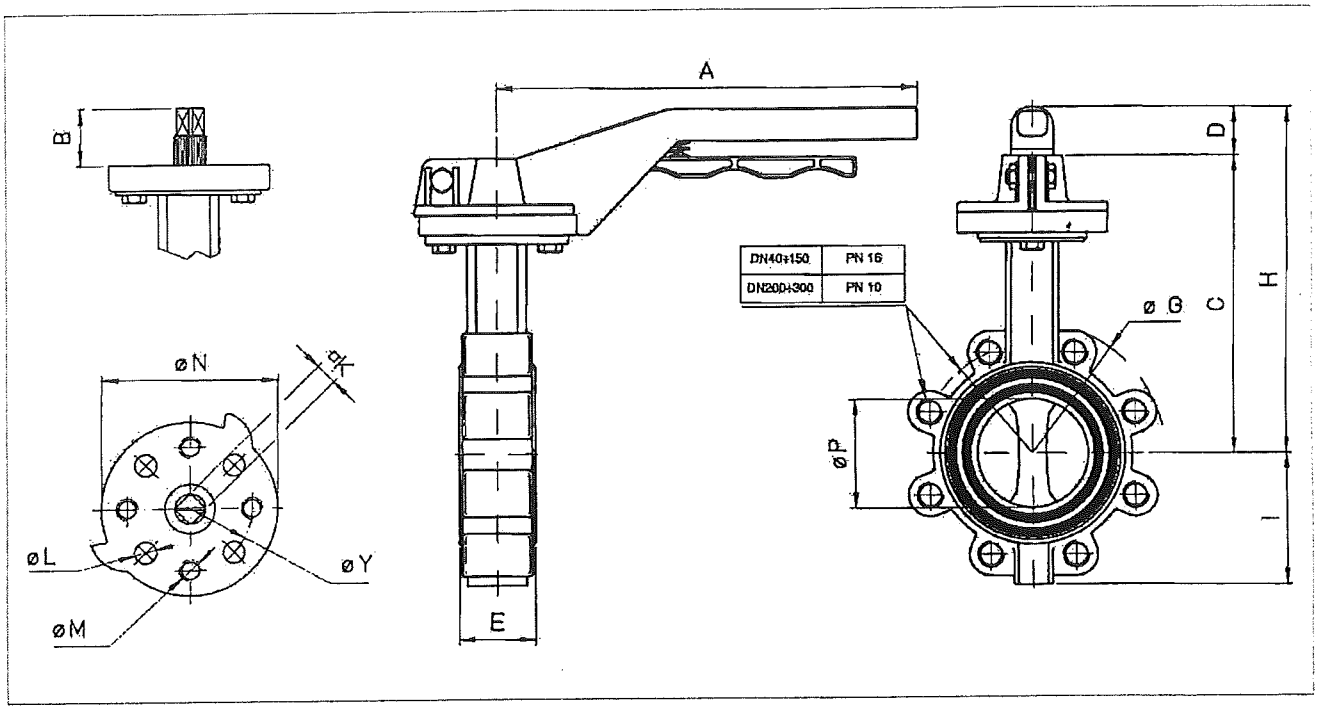

SYMBOL ZAWORU Z DŹWIGNIĄ VALVE CODE WITH LEVER

DN	40	50	65	80	100	125	150	200	250	300	350	400	450	500
KORPUS I MOTYLEK - ŻELIWO GGG50, WKŁADKA - EPDM	V382LE68	V382LE69	V382LE70	V382LE71	V382LE72	V382LE73	V382LE74	V382LE75	V382LE76	V382LE77	.....	.....	.....	.....
KORPUS I MOTYLEK - ŻELIWO GGG50, WKŁADKA - NITRILE	V382LN68	V382LN69	V382LN70	V382LN71	V382LN72	V382LN73	V382LN74	V382LN75	V382LN76	V382LN77	.....	.....	.....	.....
KORPUS I MOTYLEK - ŻELIWO GGG50, WKŁADKA - FKM	V382LV68	V382LV69	V382LV70	V382LV71	V382LV72	V382LV73	V382LV74	V382LV75	V382LV76	V382LV77	.....	.....	.....	.....
KORPUS - ŻELIWO GGG50, MOTYLEK - AISI 316, WKŁADKA - EPDM	V384LE68	V384LE69	V384LE70	V384LE71	V384LE72	V384LE73	V384LE74	V384LE75	V384LE76	V384LE77	.....	.....	.....	.....
KORPUS - ŻELIWO GGG50, MOTYLEK - AISI 316, WKŁADKA - NITRILE	V384LN68	V384LN69	V384LN70	V384LN71	V384LN72	V384LN73	V384LN74	V384LN75	V384LN76	V384LN77	.....	.....	.....	.....
KORPUS - ŻELIWO GGG50, MOTYLEK - AISI 316, WKŁADKA - FKM	V384LV68	V384LV69	V384LV70	V384LV71	V384LV72	V384LV73	V384LV74	V384LV75	V384LV76	V384LV77	.....	.....	.....	.....
KORPUS - ŻELIWO GGG50, MOTYLEK - BRĄZ, WKŁADKA - EPDM	V389LE68	V389LE69	V389LE70	V389LE71	V389LE72	V389LE73	V389LE74	V389LE75	V389LE76	V389LE77	.....	.....	.....	.....
KORPUS - ŻELIWO GGG50, MOTYLEK - BRĄZ, WKŁADKA - NITRILE	V389LN68	V389LN69	V389LN70	V389LN71	V389LN72	V389LN73	V389LN74	V389LN75	V389LN76	V389LN77	.....	.....	.....	.....
DŹWIGNIA	KLV37268	KLV37269	KLV37270	KLV37271	KLV37272	KLV37273	KLV37274	KLV37275	KLV37276	KLV37277				

BODY AND BUTTERFLY - CAST IRON GGG50, LINER - EPDM
BODY AND BUTTERFLY - CAST IRON GGG50, LINER - NITRILE
BODY AND BUTTERFLY - CAST IRON GGG50, LINER - FKM
BODY - CAST IRON GGG50, BUTTERFLY - AISI 316, LINER - EPDM
BODY - CAST IRON GGG50, BUTTERFLY - AISI 316, LINER - NITRILE
BODY - CAST IRON GGG50, BUTTERFLY - AISI 316, LINER - FKM
BODY - CAST IRON GGG50, BUTTERFLY - BRONZE, LINER - EPDM
BODY - CAST IRON GGG50, BUTTERFLY - BRONZE, LINER - NITRILE
LEVER

WYMIARY *DIMENSIONS*

Size	A	B	C	D	E	øG	I	□K	øL	øM	øN	øY	H	Kg.
DN 40	166	30	170	28	33	150	65	8	9	M8	88	70	198	3,3
DN 50	166	30	186	28	43	165	70	8	9	M8	88	70	214	3,8
DN 65	166	30	192	28	46	185	81	9	9	M8	88	70	220	4,8
DN 80	205	30	195	28	46	200	88	11	9	M8	88	70	228	6,8
DN 100	205	30	215	28	52	220	109	11	9	M8	88	70	243	8,3
DN 125	330	30	234	0	56	250	123	14	9	M8	105	70	237	11,6
DN 150	330	30	244	0	56	285	140	14	9	M8	105	70	246	12,6
DN 200	330	30	284	0	60	340	182	17	9	M8	105	70	286	19,1
DN 250	600	40	288	0	68	406	214	19	11	...	150	102	288	32
DN 300	600	40	320	0	78	482	240	22	11	...	150	102	320	45,5
DN 350	600	40	340	0	78	520	280	22	18	...	170	140	...	
DN 400	600	40	380	0	102	597	320	27	18	...	170	140	...	
DN 450	...	80	474	...	114	650	344	ø50	18	...	170	140	...	
DN 500	...	80	520	...	127	700	380	ø50	18	...	175	140	...	

ART. 415 PN 16
2-way full-bore flat-body flanged
stainless steel ball valve

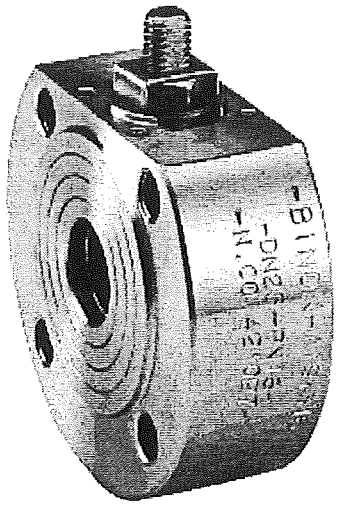

VALVE FEATURES

Standard executions:
Flanges as per: UNI 2223 and 2229 PN 16
DIN 2501 BL.1
Available on request UNI (PN 25-40-64-100) ANSI B16.5 - ANSI B16.10 (150 RF, 300 RF, 600 RF)
General specifications: BS 5351
("FIRE SAFE" conforming to BS 6755 on request)
Working temperature: from -20°C to +150°C (+200°C with special seals).
Working pressure: PN 16.
Fluid range: air, water, gas, petroleum and petrochemical products, aggressive media.

On request:
PN 25.
Heating jackets.
Seals made of:
PTFE with glass;
PTFE with carbon graphite;
For other applications, please contact our technical department.

Approvals:
According to 97/23 EC "PED"

DETAILS

Valve codes in standard execution
Materials / Dimensions
Automated Valve type 415 PN 16

<< BACK TO MENU'

ART. 415 PN 16

2-way full-bore flat-body flanged
stainless steel ball valve

VALVE CODES IN STANDARD EXECUTION

size	DN 15	DN 20	DN 25	DN 32	DN 40	DN 50	DN 65	DN 80	DN 100	DN 125	DN 15
free shaft	V415X604	V415X605	V415X606	V415X607	V415X608	V415X609	V415X610	V415X611	V415X612	V415X613	V415X6
weight Kg.	1,2	1,6	2,3	3,7	3,9	5,4	9,8	13,2	19,5	50	80
With lever	L415X604	L415X605	L415X606	L415X607	L415X608	L415X609	L415X610	L415X611	L415X612	L415X613	L415X6
weight Kg.	1,35	1,8	2,5	4	4,2	5,8	10,2	13,7	20	51	81

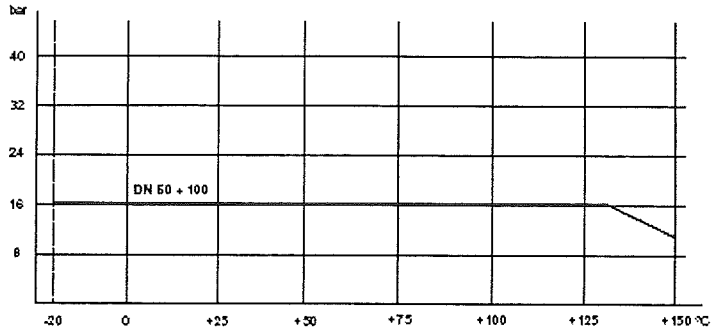

pressure/temperature diagram

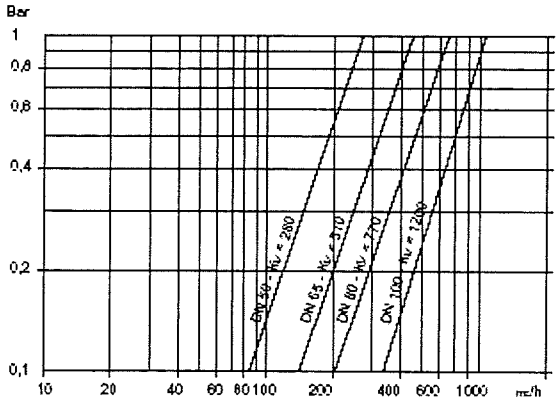

flow-pressure loss diagram and Kv nominal coefficient.

Kv is the coefficient, expressed in m3/h (with water at 15°C) causing a pressure loss of 1 bar.

BREAK AWAY TORQUES in Nm

misura size	DN 15	DN 20	DN 25	DN 32	DN 40	DN 50	DN 65	DN 80	DN 100	DN 125	DN 150
PN 0 bar											
PN 16 bar	6	11	17	28	33	50	70	100	200	275	520
PN 25 bar											
PN 40 bar											

Torque can vary depending on temperature and type of fluid; a safety factor of 1.4 must be applied.
Torque can drop on high frequency of operations.

<< BACK TO MENU'

ART. 415 PN 16
2-way full-bore flat-body flanged
stainless steel ball valve

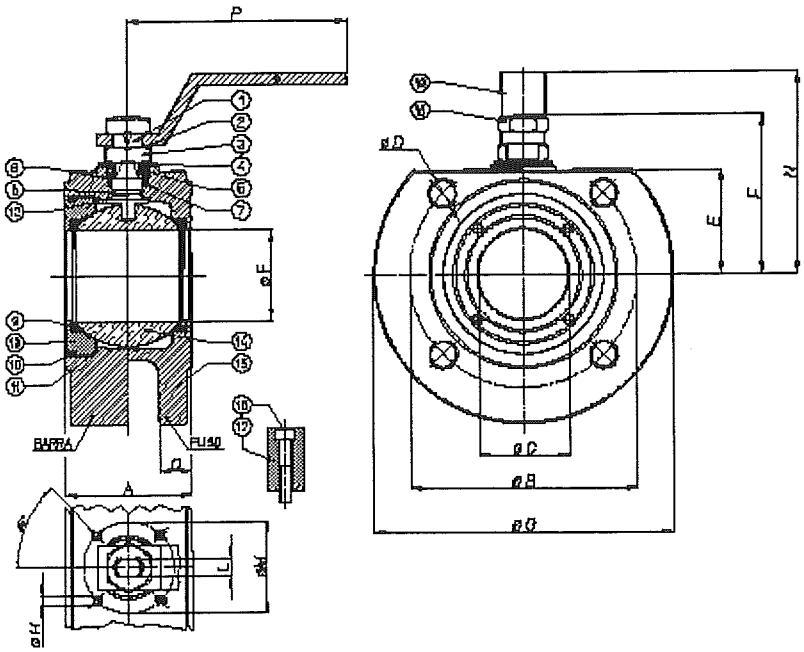

MATERIALS			
1) Shaft	AISI 316	1.4401	UNI X5CrNiMo 17 12
2) Nut holder	AISI 304	1.4301	UNI X5CrNi 18 10
3) Lock nut	AISI 304	1.4301	UNI X5CrNi 18 10
4) Spring	AISI 301	1.4310	UNI X12CrNi 17 07
5) Ring	AISI 304	1.4301	UNI X5CrNi 18 10
6) Gland nut ring	AISI 304	1.4301	UNI X5CrNi 18 10
7) Top sealing **	P.T.F.E.		
8) O-ring **	FKM		
9) Seals	P.T.F.E.		
10)O-ring	KFM		
11)Ring nut sealing	P.T.F.E.		
12)Bottom sealing	P.T.F.E.		
13)Ring nut *	AISI 316	1.4401	UNI X5CrNiMo 17 12
14)Ball *	AISI 316	1.4401	UNI X5CrNiMo 17 12
15)Body *	AISI 314	1.4408	
16)Holder screw	AISI 304	1.4301	UNI X5CrNi 18 10
17)Holder	AISI 304	1.4301	UNI X5CrNi 18 10
18)Lever nut	AISI 304	1.4301	UNI X5CrNi 18 10
19)Lever	AISI 304	1.4301	UNI X5CrNi 18 10

* Version in AISI 304 on request
** DN 125-150 tight with PTFE loaded seals without o-ring.

DIMENSIONS														
Size	A	řB	C	D	řE	řF	řG	řH	L	řM	holes	N	P	Q

DN15	35	65	15	M12	31	48	90	M5	6	36	4	65	140	--	solid bar
DN20	38	75	85	M12	34	51	100	M5	6	36	4	70	140	--	solid bar
DN25	43	85	25	M12	39,5	62,5	110	M5	8	42	4	82	180	--	solid bar
DN32	50	100	32	M16	46	67	130	M5	8	42	4	85	180	--	solid bar
DN40	60	110	40	M16	50	80	150	M6	10	50	4	102	230	16	casting
DN50	70	125	50	M16	57	87	165	M6	10	50	4	110	230	18	casting
DN65	95	145	65	M16	80	119,5	185	M8	14	70	4	137,5	350	18	casting
DN80	118	160	78	M16	90	129,5	200	M8	14	70	8	150	350	20	casting
DN100	140	180	96	M16	101	148,5	220	M10	16	102	8	165	508	20	casting
DN125	170	210	118	M16	-	-	255	M10	16	102	8	240	400	--	solid bar
DN150	210	240	144	M20	-	-	295	M12	26	125	8	270	500	--	solid bar

<< BACK TO MENU'

ART. 415
AUTOMATED VALVE TYPE 415

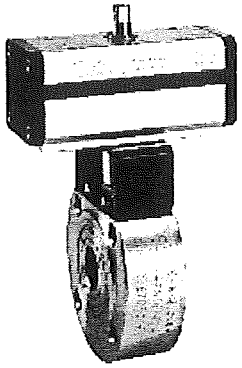

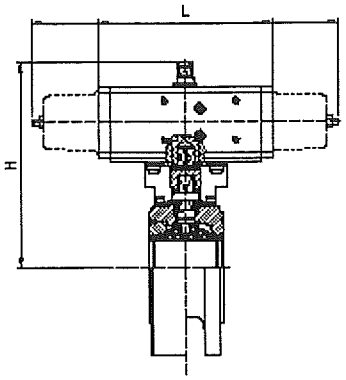

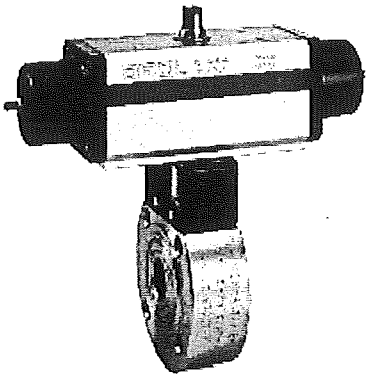

DOUBLE ACTING PNEUMATIC ACTUATOR						
Article	Actuator	Mounting kit	DN mm	L mm	H mm	Weight Kg
D415K064	DA015401S	KCF031315	15	114	143	2,3
D415H065	DA030401S	KCF031315	20	130	154	3
D415H066	DA030401S	KCF031317	25	130	159,5	3,7
D415A067	DA045402S	KCF042354	32	144	172	5,4
D415H068	DA060402S	KCF042355	40	152	180	7,1
D415A069	DA090401S	KCF051322	50	169	195	7,4
D415H070	DA120401S	KCF051325	65	184	245	12,9
D415A071	DA180401S	KCF071326	80	212	265	16,5
D415A072	DA360401S	KCF101092	100	264	329	28
D415H073	DA480401S	KCF101092	125	295	359	59,5
D415H074	DA960401S	KCF122425	150	384	427	95

SPRING RETURN PNEUMATIC ACTUATOR						
Article	Actuator	Mounting kit	DN mm	L mm	H mm	Weight Kg
S415K064	SR015401S	KCF031315	15	221	151	2,8
S415H065	SR030402S	KCF042353	20	240	164	4
S415H066	SR030402S	KCF042354	25	240	169,5	4,6
S415A067	SR045401S	KCF051909	32	294	184	6,7
S415H068	SR060401S	KCF051322	40	320	206	9,1
S415A069	SR090401S	KCF071323	50	357	233	10
S415H070	SR120401S	KCF071326	65	372	265	16,3
S415A071	SR180401S	KCF101280	80	436	297	23,2
S415A072	SR360401S	KCF101265	100	566	359	37,3
S415H073	SR480401S	KCF101065	125	609	382	70,5
S415H074	SR960401S	KCF142424	150	767	472	115

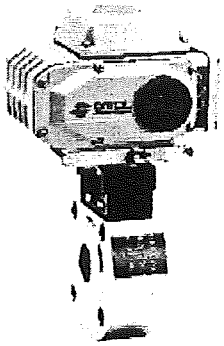

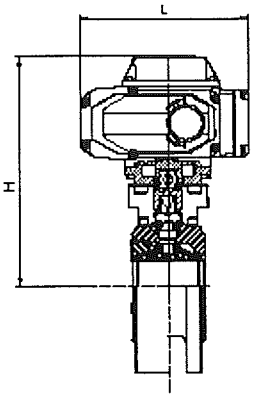

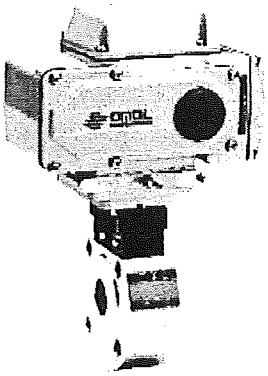

ON-OFF ELECTRICAL ACTUATOR						
Article	Actuator	Mounting kit	DN mm	L mm	H mm	Weight Kg
E41516D64	AE160004	KCF051907	15	158,5	190,5	4,3
E41516D65	AE160004	KCF051907	20	158,5	193,5	4,8
E41516D66	AE160004	KCF052074	25	158,5	199	5,4
E41516D67	AE160004	KCF051909	32	158,5	205,5	6,9
E41516H68	AE160010	KCE281912	40	207,5	253,5	10,1
E41516H69	AE160010	KCE281912	50	207,5	260,5	9,9
E41516H70	AE160010	KCE281921	65	207,5	283,5	14,8

ROTARY MODULAR TYPE ELECTRICAL ACTUATOR						
Article	Actuator	Mounting kit	DN mm	L mm	H mm	Weight Kg
M41516C64	AM160002	KCF051907	15	158,5	190,5	4,3
M41516F65	AM160005	KCE282020	20	207,5	237,5	7,3
M41516F66	AM160005	KCE281880	25	207,5	243	7,9
M41516F67	AM160005	KCE282075	32	207,5	249,5	9,3
M41516L68	AM160020	KCE362076	40	256,5	295	15,4
M41516L69	AM160020	KCE362022	50	256,5	302	15
M41516L70	AM160020	KCE361911	65	256,5	325	19,7

E41516L71	AE160020	KCE361911	80	256,5	335	21,5	M41516L71	AM160020	KCE361911	80	256,5	335	29,3
E41516N72	AE160040	KCE362024	10	256,5	346	30	M41516P72	AM160050	KCE562023	100	381	395	44,9
E41516R73	AE160060	KCE562023	125	381	433	71,7	M41516P73	AM160050	KCE562023	125	381	433	74
E41516T74	AE1600100	KCE562426	150	381	478	101,5	M41516T74	AM160100	KCE562426	150	381	478	103,8

<< BACK TO MENU'

Type 1 (for remote mounting)

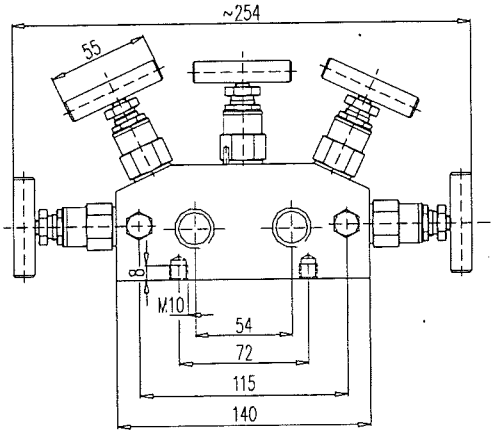

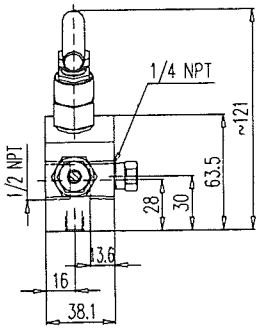

Type 2 (for direct mounting)

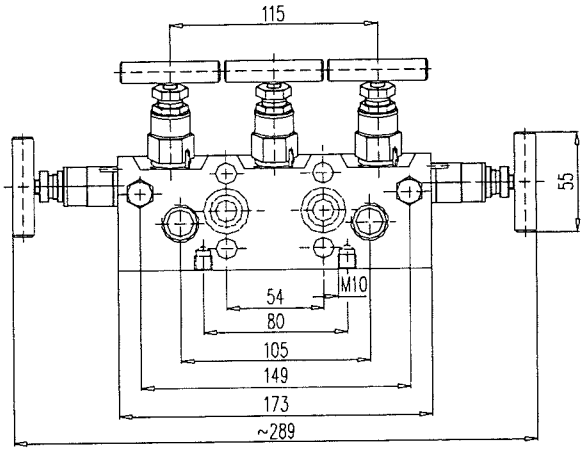

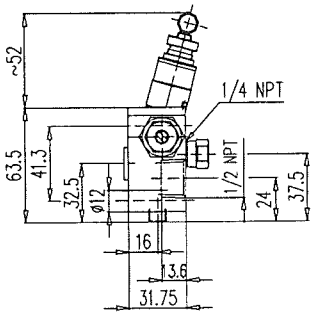

1 PTFE packing
2 graphite packing - 1.0460
3 graphite packing - 1.4404

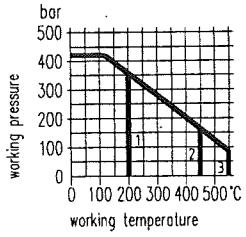

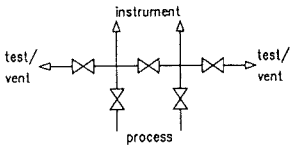

MOUNTING ACCESSORIES see section 8

Type	Material	Connections: Inlet	Connections: Outlet	Test / Vent	Part no.
1	steel st. st.	1/2 NPT female		1/4 NPT female with screw plug	N342.42.182.01 N342.42.482.01
2	steel st. st.	1/2 NPT female	IEC Type A [4]		N542.48.180.01 N542.48.480.01

Components	Steel	Stainless steel [1]
	DIN - Material Number	
Body [2]	1.0460	1.4404 / 316L
Bonnet	1.4401 / 316	
Valve stem	1.4404	
Needle tip [3]	1.4122 [5]	1.4571
Packing	PTFE up to 200°C (graphite up to 550°C)	
Gland nut	1.4301	
T-handle	stainless steel	
Screw plug	1.0501	1.4404

- Surface: steel phosphatized
- External stem thread
- Stem with cold rolled surface, back seat and non-rotating needle tip
- Special types are available
- The manifolds can be supplied according to NACE-standard

1) Can also be supplied for oxygen service. Please notice order instruction B 3!
2) Available with inspection certificate 3.1.B acc. to EN 10 204
3) Also available with soft tip in KEL-F® (PCTFE) or Delrin® (POM)
4) Dimensions acc. to IEC 61518 / DIN EN 61518 see order instruction B 4
5) 1.4122 quenched and tempered

SCHNEIDER Armaturen	2 valve manifold PN 420 DN 5 for pressure instruments with 1/2 NPT and G 1/2 male	4.06 01/02

1 PTFE packing
2 graphite packing - 1.0460
3 graphite packing - 1.4404

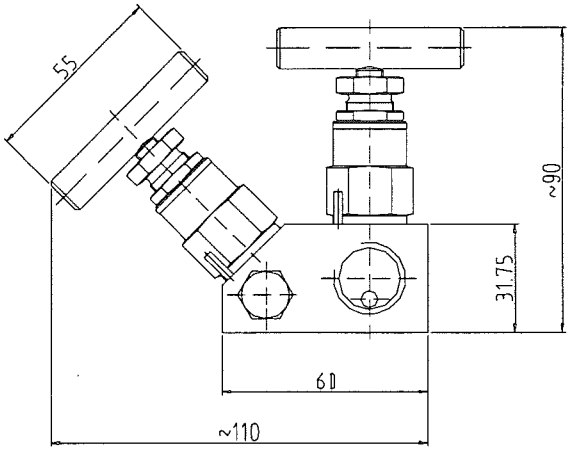

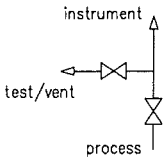

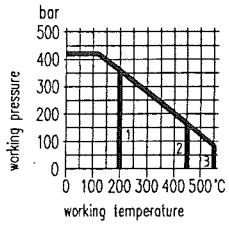

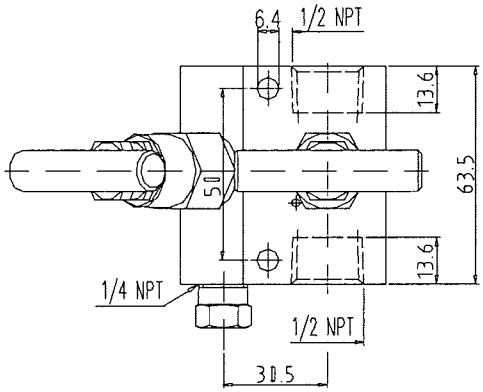

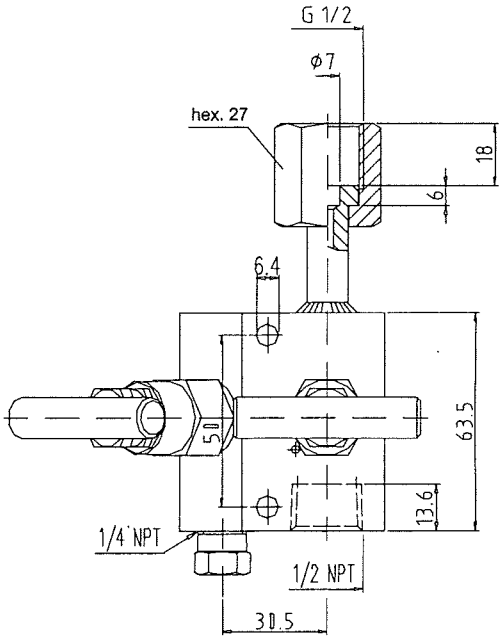

MOUNTING ACCESSORIES see section 8 and 10

Material	Connections: Inlet	Connections: Outlet	Test / Vent	Part no.
steel st. st.	1/2 NPT female		1/4 NPT female with screw plug	N342.44.183.21 N342.44.483.21
steel st. st.	1/2 NPT female	swivel nut G 1/2		N342.44.183.22 N342.44.483.22

Components	Steel	Stainless steel 1)
	DIN - Material Number	
Body 2)	1.0460	1.4404 / 316L
Bonnet	1.4401 / 316	
Valve stem	1.4404	
Needle tip 3)	1.4122 4)	1.4571
Packing	PTFE up to 200°C (graphite up to 550°C)	
Gland nut	1.4301	
T-handle	stainless steel	
Screw plug	1.0501	1.4404

- Surface: steel phosphatized
- External stem thread
- Stem with cold rolled surface, back seat and non-rotating needle tip
- Special types are available
- The manifolds can be supplied according to NACE-standard

1) Can also be supplied for oxygen service. Please notice order instruction B 3!
2) Available with inspection certificate 3.1.B acc. to EN 10 204
3) Also available with soft tip in KEL-F® (PCTFE) or Delrin® (POM)
4) 1.4122 quenched and tempered

Type 1 (for remote mounting)

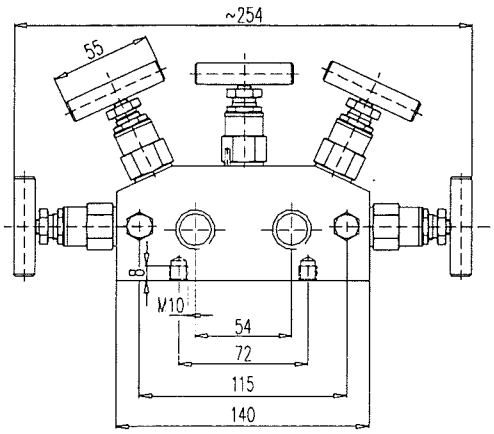

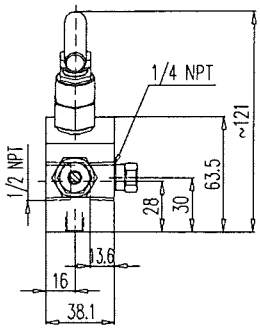

Type 2 (for direct mounting)

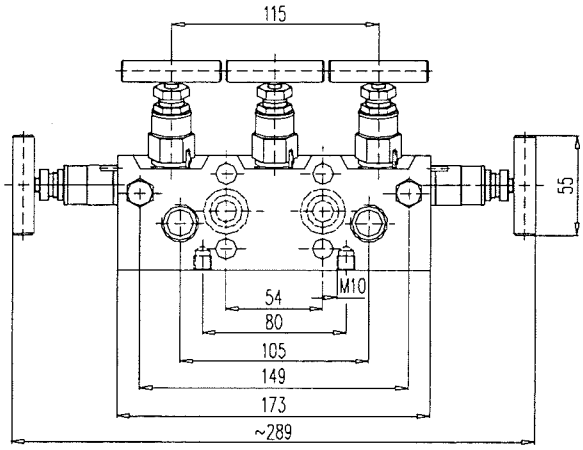

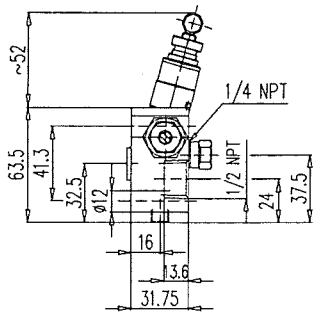

1 PTFE packing
2 graphite packing - 1.0460
3 graphite packing - 1.4404

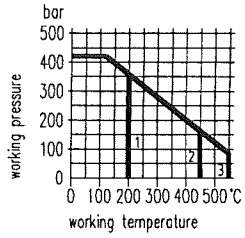

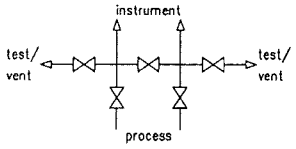

MOUNTING ACCESSORIES see section 8

Type	Material	Connections: Inlet	Connections: Outlet	Test / Vent	Part no.
1	steel st. st.	1/2 NPT female		1/4 NPT female with screw plug	N342.42.182.01 N342.42.482.01
2	steel st. st.	1/2 NPT female	IEC Type A 4)		N542.48.180.01 N542.48.480.01

Components	Steel	Stainless steel 1)
	DIN - Material Number	
Body 2)	1.0460	1.4404 / 316L
Bonnet	1.4401 / 316	
Valve stem	1.4404	
Needle tip 3)	1.4122 5)	1.4571
Packing	PTFE up to 200°C (graphite up to 550°C)	
Gland nut	1.4301	
T-handle	stainless steel	
Screw plug	1.0501	1.4404

- Surface: steel phosphatized
- External stem thread
- Stem with cold rolled surface, back seat and non-rotating needle tip
- Special types are available
- The manifolds can be supplied according to NACE-standard

1) Can also be supplied for oxygen service. Please notice order instruction B 3!
2) Available with inspection certificate 3.1.B acc. to EN 10 204
3) Also available with soft tip in KEL-F® (PCTFE) or Delrin® (POM)
4) Dimensions acc. to IEC 61518 / DIN EN 61518 see order instruction B 4
5) 1.4122 quenched and tempered

1.0 General

1.1 Flow sight glasses are required to make an optical good recognition of the stream of liquid and gaseous media.

Flow through sight glasses can be installed in pipes horizontal as well as vertical.

2.0 Installation in the pipe

2.1 Before installation clean the pipe as well as you can.
2.2 Rinse and dry the armature.
2.3 The ends of the pipeline and the connecting flanges must be parallel. It has to be considered that the direction-arrow shows in flow direction.
2.4 If possible, tighten the connecting bolts of the flanges by means of a torque wrench, proceeding in opposite direction.
2.5 When tightened these bolts any distortion of the sight glass should be avoided.

3.0 Start-up and switch-off of plants

3.1 The start-up and switch-off of plants represents always a special situation. According to the geometry of the pipe and the conduct of the process, appropriate steps must be infringed.
3.2 In case of operation of plants the flow through sight glass must be checked on tightness and if necessary the cover screws have to be tightened.

4.0 Maintenance

4.1 Sight-glasses may only be installed by qualified personel (please also refer to TRB 700) who are informed about the following necessities in detail.
4.2 The installation of the glasses is effected according to DIN 7080 to DIN 8902.
4.3 After operative application re-installed glasses may not be re-used.
4.4 New and suitable gasket material has to be used.
4.5 Glasses, gaskets and sealing surfaces have to be cleaned that means impurities have to be removed (i. e. gasket remainders, chips ect.)
4.6 Around the glasses there has to be a clearance of 1 mm to allow thermal expansion.
4.7 The cover screws (nuts) shall be tightened crosswise first time with about 50% of the given torque, at the second run with about 80% and only at the third run with full torque. All screws have to show the prescribed tension, therefore the starting torque has to be checked repeatedly. After a time of about 4 minutes the starting torque must again be checked. Because of unregular or too strong tightening of the screws (nuts) the glasses can be destroyed.
4.8 If quarz glasses are used each damage of the glasses has to be avoided. The tensile strength of the quarz-glass is about 3-4 times lower than of thermal tempered glasses, therefore every kind of negative strength effect on the glass has to be excluded. The installed quarz glasses have to be checked on maximum possible stress-freedom.
4.9 Quarz glasses should be wrapped around with 0,5 mm self-adhesive tape in order to prevent from lying laterally on the body or from a non - centric installation position. (For example self-adhesive tape F05010ZS Fa. Sigri).

ⓒ			
ⓑ			
ⓐ	0020029	20.06.00	Klein
Nr.	Änderung	Datum	Name

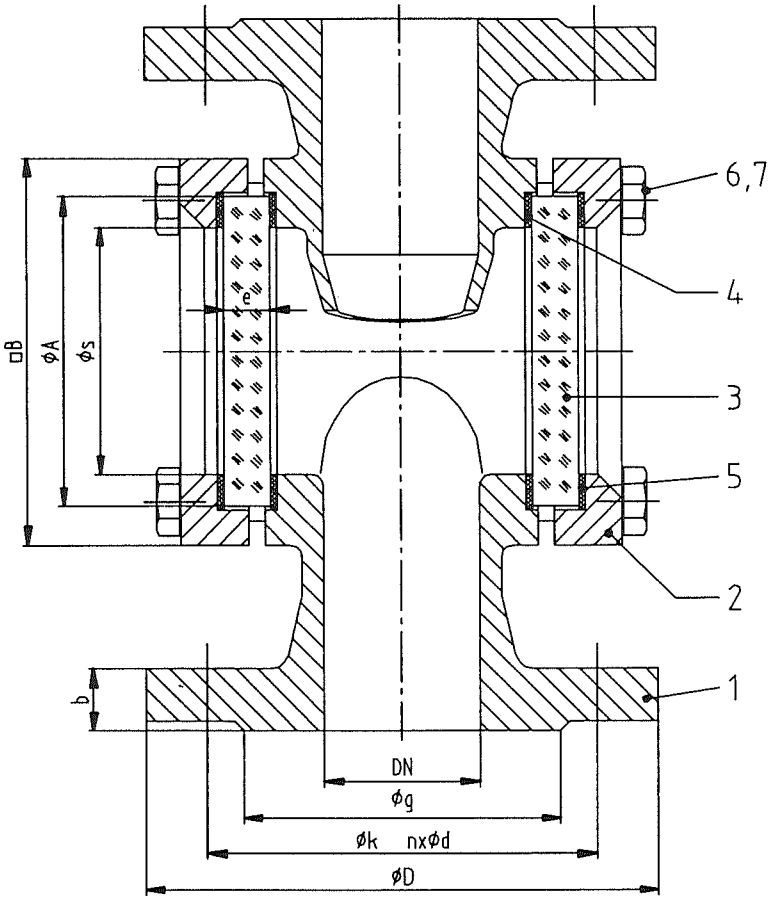

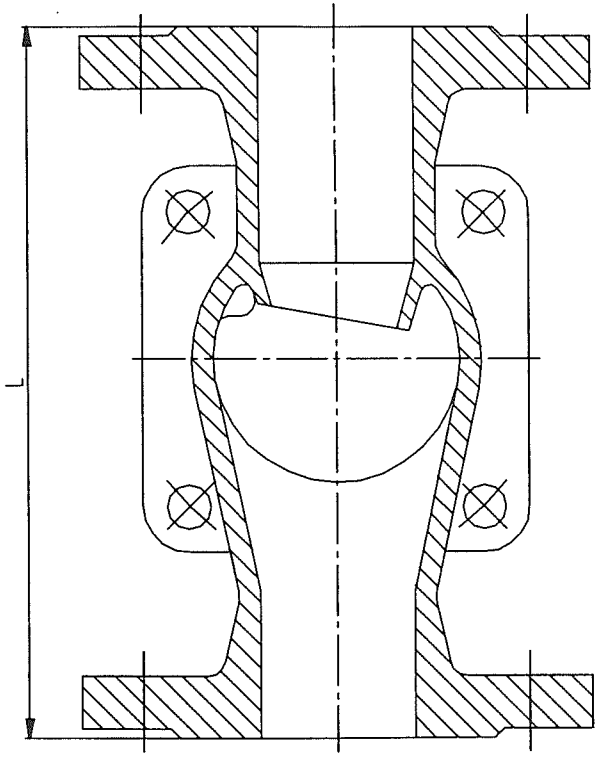

Änderungen im Zuge der Weiterentwicklung vorbehalten !
The parts are subject to change by technical innovation !

Pos. 3,4,5 Ersatzteil
Item 3,4,5 Spare parts

✳= auf Wunsch mit Borosilicatglas
on wish Borosilicatglas

DN	L	Flanschanschlußmaße Flange connection measurement					Glasscheibe Glas disc			Halteflansch Flange		Dichtung Sealing	Schrauben Screws
		D	k	nxd	g	b	A	e (PN10)	e (PN16)	s	B		
15	130	95	65	4x14	45	16	50	10		40	68	ϕ52/40x2	M8x35
20	150	105	75		58	18	63	10		48	80	ϕ65/48x2	M8x40
25	160	115	85		68		63	10		48	80	ϕ65/48x2	M8x40
32	180	140	100	4x18	78		80	12		68	100	ϕ82/68x2	M10x45
40	200	150	110		88		80	12		68	105	ϕ82/68x2	M10x45
50	230	165	125		102		100	15		85	125	ϕ102/85x2	M12x55
65	290	185	145		122		125	15	20	100	152	ϕ127/100x2	PN10=M16x50 PN16=M16x55
80	310	200	160	8x18	138	20	150	20	25	125	168	ϕ152/125x2	PN10=M16x80 PN16=M16x90
100	350	220	180		158		150	20	25	125	175	ϕ152/125x2	PN10=M16x80 PN16=M16x90

POS	Stck	Benennung	Designation	Material
7	8	Sk.-Mutter	Hex.-nut	5-2
6	8	Sk.-Schraube	Hex.-head screw	5.6
5	2	Dichtung Atmosphärenseite	Sealing	asbestfrei
4	2	Dichtung Produktseite	Sealing	asbestfrei
3	2	Glasscheibe	Glass disc	Preßhartglas ✳
2	2	Halteflansch	Flange	1.0425
1	1	Gehäuse	Body	1.0619

SG71	Datum	Name	Auftrags-Nr.:
gezeichnet	20.06.00	Holterhof	
geprüft			Angebots-Nr.:
normgepr.			

FRIEDRICH KROMBACH
GmbH & Co.KG · Armaturenwerke
D-57202 Kreuztal · Postfach 1138

Maßstab
%

Durchfluß - Schauglas
Flow through sight glass
DN 15-100 PN 10/16

Zeichnungs-Nr.:
SG 403-2/3a

Ersatz für:
Ersetzt durch:

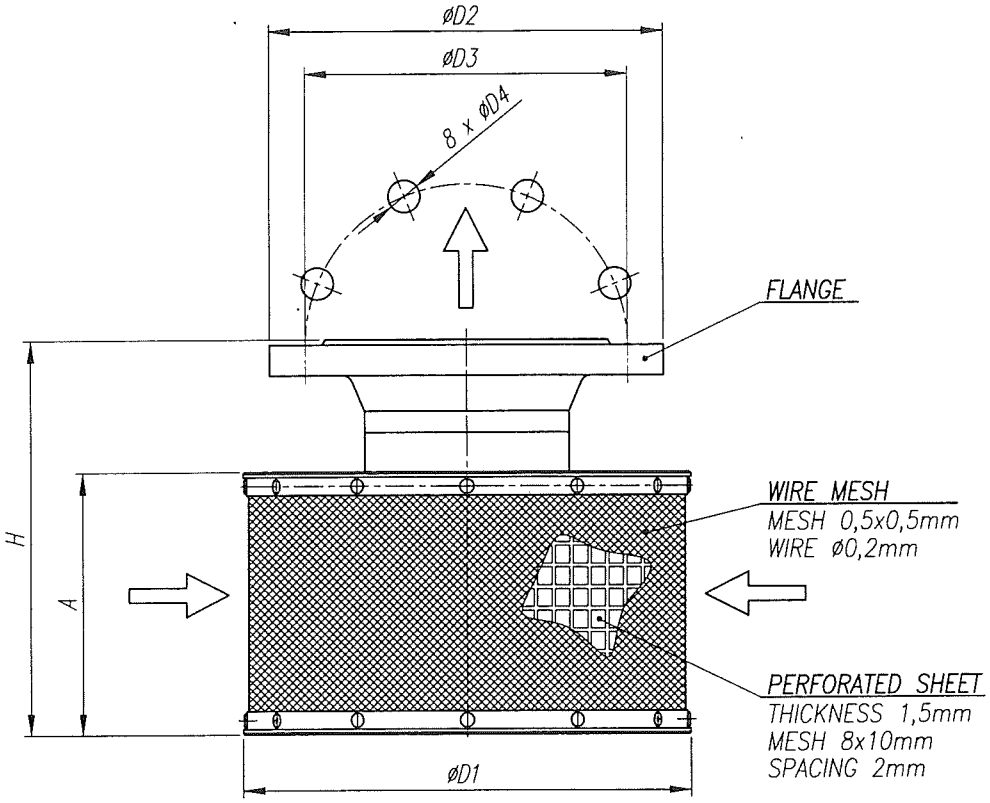

TYPE		DIMENSION [mm]						MATERIAL	FILTRATION AREA [cm²]
SIZE	FLANGE	A	H	D1	D2	D3	D4		
4"	DN100, PN16	145	215	250	220	180	18	1.4401	280
	ANSI 150 lb.	145	240	250	228.6	190.83	19	316	
5"	DN125, PN16	180	260	300	250	210	18	1.4401	450
	ANSI 150 lb.	180	300	300	254	215.9	22.2	316	
6"	DN150, PN16	220	310	320	285	240	22	1.4401	620
	ANSI 150 lb.	220	340	320	279.4	241.3	22.2	316	

Revision no.	Revision qty	Date	Signature	Remarks	Revision no.	Revision qty	Date	Signature	Remarks

	Name	Date	Signature				
Designed by	D.Mroczka	12.2004		Material	Description		Format
Drawn by	G.Cholewiński	12.2004		Stainless Steel	SUCTION ROSE		A4
Checked by	D.Mroczka	06.2005					
Approved by	T.Gajewski	06.2005		Weight kg	DN100-150, PN16 4"-6" ANSI 150 lb.		Sheet No.
Scale	ROCKFIN NOWY TUCHOM 10 80-209 CHWASZCZYNO POLAND			-			1/1
-				Status	Drawing No.	Revision	Language
				-	S-KF/01.00/00	00	EN

This document contains proprietary information. It is not permitted to copy and make this document available to a third party without consent of ROCKFIN Sp. z o.o. company.